Important information
Serious risk of injury

When working on the engine, e.g. when adjusting the drive belts and clutch, or when changing oil, it is important not to start the engine. The engine could be damaged, but more importantly there is a serious risk of injury.

For this reason, always secure the starting device or disconnect a battery cable before working on the engine. This is especially important if the engine has a remote starter or automatic starting.

WARNING!

This warning symbol and text can be found next to maintenance items where it is particularly important to bear in mind the risk of injury.

Operator's manual
DC09 XPI Industrial engine
en-GB 3 332 741

Issue 22.0

IMPORTANT!

The owner is responsible for making sure that maintenance is carried out on time and in accordance with the instructions.

The owner must entrust the maintenance, renewal, and repair of emission-related components and systems to a qualified workshop or person.

WARNING: This engine can expose you to chemicals including diesel engine exhaust which is known to the State of California to cause cancer and birth defects or other reproductive harm.
For exposures to diesel engine exhaust:

- Always start and operate the engine in a well-ventilated area.
- If in an enclosed area, vent the exhaust to the outside.
- Do not modify or tamper with the exhaust system.
- Do not idle the engine except as necessary.

For more information go to www.P65Warnings.ca.gov.

404 101

Start of warranty 3
Scania Power Solutions engine warranty for industrial engines 4
Emission control systems warranty for USA . 4
Emission control warranty statement for California, USA 8
Emission control system warranty for China 11
Emission control system warranty for South Korea 15
Introduction 19
Certification 19
Power classes 20
Environment and safety 21
Environmental liability 21
Information on parts with particularly hazardous substances 21
Safety 21
Warnings and advisories 23
Engine data plate 29
Component identification 30
Engine 30
Exhaust gas aftertreatment 31
Starting and running 33
Checks before first start 33
Checks before driving 34
Starting the engine 35
Driving 35
Engine shutdown. 45
Checks after driving 45
Transporting engines. 46
Maintenance 47
Cleaning the engine. 49
Engines with few hours of operation 49
Maintenance intervals 50
Lubrication system 53
Oil grade 53
Oil analysis 56
Checking the oil level 57
Maximum angles of inclination during operation 58
Changing the oil 59
Cleaning upwards-moving centrifugal oil cleaner 60
Operational testing of the centrifugal oil cleaner 64
Renewing the rotor in downwards-moving centrifugal oil cleaner 65
Renewing the oil filter. 68
Air cleaner 69
Reading the vacuum indicator. 69
Renewing the air cleaner filter element and safety cartridge 70
Cooling system 71
Coolant 71
Checking the coolant level 75
Checking the coolant's antifreeze and corrosion protection 76
Changing the coolant and cleaning the cooling system. 77
Fuel system 85
Cleanliness requirements 85
Checking the fuel level. 85
Renewing the fuel filters 86
Venting the fuel system 91
Other 96
Checking the drive belt 96
Checking for leakage 98
Checking and adjusting the valve clearance .99
Renewing the reductant filter. 102
Cleaning the reductant tank filler filter 105
Checking venting functionality 105
Renewing the venting filter 106
Renewing the particulate filter. 107
Quality requirements for fuel 113
Diesel 113
Biodiesel (FAME) 116
Renewable diesel (HVO) 116
Gas-to-liquids (GTL) 116
Reductant for SCR 117
Preparing the engine for storage 118
Preservative products 118
Preparations for storage 120
Technical data 122
General data 122
Lubrication system 122
Intake system 123
Cooling system. 123
Fuel system. 123
Electrical system 123
Tightening torque for screw joint 124
Screws and nuts 124
Hose clamps 125
Scania Assistance 126

© Scania CV AB 2025, Sweden

Start of warranty

The more we know about you, your company and your equipment, the more effectively we can adapt our services to you. If you have started to use a new Scania engine, it is very important that you send in the warranty start report to us immediately. Quite simply, we need to register all the details on engine ownership etc., so we can monitor it for you.

You can report the start of the warranty on the Scania website: www.scania.com.

Note:

If you do not send in the warranty report, the engine is not covered by the accompanying Scania warranty.

Also fill in below the details you enter in the warranty report. These details can facilitate contact with a workshop, for example. The engine serial number is on the engine data plate and is also engraved on the cylinder block.

Engine serial number (e.g. 1111111)

Ship ID (for example MMSI 111111111 or IMO 1111111)

Start date (yyyy-mm-dd)

Company name

Contact person

Telephone number

E-mail address

Address

Postcode

Postal town

State/County

Country

© Scania CV AB 2025, Sweden

Scania Power Solutions engine warranty for industrial engines

Emission control systems warranty for USA

IMPORTANT!

Only applicable to engines used in the U.S.A.

Table of Contents

General warranty provisions	4
Warranty period	4
Parts covered by the Warranty	5
General warranty limitations	6
Specific warranty exclusions	7
Customer support	7

Emission control system warranty statement

General warranty provisions

The emission control systems of your new Scania Engines (“Scania”) industrial diesel engine were designed, built and tested using genuine parts, and were certified as being in conformity with federal emission control regulations. Scania warrants to the original owner, and to each subsequent owner, of a new Scania industrial diesel engine (“You”) that the engine:

1. Was designed, built and equipped so as to conform at the time of sale with all applicable regulations under Section 213 of the Clean Air Act, 42 U.S.C. § 7547, for their full useful life and designed, built and equipped so as to conform with all applicable regulations adopted by the California Air Resources Board pursuant to its authority under Chapters 1 and 2, Part 5, Division 26 of the California Health and Safety Code, and;
2. Is free from defects in material and workmanship which would cause such engine to fail to conform to applicable regulations for its warranty period or otherwise cause the failure of a warranted part to be identical in all material respects to the part as described in the engine manufacturer's application for certification.

Where a warrantable condition exists, Scania will repair your heavy-duty off-road engine at no cost to You including diagnosis, parts, and labor.

Warranty period

This warranty shall apply for one of the following periods, whichever occurs first:

- 3,000 hours of operation as determined by a device to measure hours of use, or
- Five years

Each engine is equipped with a device to measure hours of use. If that device fails to account for hours of use due to defects in materials or workmanship, the engine shall be warranted for a period of five years. The warranty period shall begin on the date the engine is delivered to the first ultimate purchaser who, in good faith, purchases the engine for purposes other than imminent resale.

The Warranty on emission-related parts shall be interpreted as follows:

1. Any warranted part which is not scheduled for replacement as required maintenance in Scania's written instructions for maintenance and use of the engine by owner shall be warranted for the warranty period defined above. If any such part fails during the period of warranty coverage, it shall be repaired or replaced by the engine manufacturer according to Subsection (4) below. Any such part repaired or replaced under the Warranty shall be warranted for the remaining warranty period.
2. Any warranted part which is scheduled only for regular inspection in Scania's written instructions for maintenance and use of the engine by owner shall be warranted for the warranty period defined above. A statement in such written instructions to the effect of “repair or replace as necessary” shall not reduce the period of warranty coverage. Any such part repaired or replaced under warranty shall be warranted for the remaining warranty period.

© Scania CV AB 2025, Sweden

3. Any warranted part which is scheduled for replacement as required maintenance in Scania's written instructions for maintenance and use of the engine by owner shall be warranted for the period of time prior to the first scheduled replacement point for that part. If the part fails prior to the first scheduled replacement, the part shall be repaired or replaced by the engine manufacturer according to Subsection (4) below. Any such part repaired or replaced under warranty shall be warranted for the remainder of the period prior to the first scheduled replacement point for the part.
4. Repair or replacement of any warranted part under the warranty provisions of this article shall be performed at no charge to the owner at a warranty station.
5. Notwithstanding the provisions of Subsection (4) above, warranty services or repairs shall be provided at all manufacturer distribution centers that are franchised to serve the subject engines.
6. The owner shall not be charged for diagnostic labor that leadsto the determination that a warranted part is in fact defective, provided that such diagnostic work is performed at a warranty station.
7. The engine manufacturer shall be liable for damages to other engine components proximately caused by a failure under warranty of any warranted part.
8. Throughout the engine's warranty period defined above, the engine manufacturer shall maintain a supply of warranted parts sufficient to meet the expected demand for such parts.
9. Any replacement part, as defined in Section 1900(b), Title 13 of the California Code of Regulations, may be used in the performance of any maintenance or repairs and must be provided without charge to the owner. It is not necessary for replacement parts to be the same brand or by the same manufacturer as the original part sold with the engine. Such use shall not reduce the warranty obligations of the engine manufacturer.
10. Add-on or modified parts, as defined in Section 1900(b), Title 13 of the California Code of Regulations, that are not exempted by the California Air Resources Board may not be used. The use of any non-exempted add-on or modified parts shall be grounds for disallowing a warranty claim made in accordance with this article. The engine manufacturer shall not be liable under this article to warrant failures of warranted parts caused by the use of a non-exempted add-on or modified part.
11. The Executive Officer of the California Air Resources Board may request, and in such case, the engine manufacturer shall provide, any documents which describe that manufacturer's warranty procedures or policies.

Parts covered by the Warranty

The following is a list of parts considered to be part of the Emission Control Systems covered by the Emission Warranty for Scania industrial engines which were built to conform to federal and California emission control regulations:

1. Fuel injection system.
2. Air induction system.
3. Exhaust manifold system.
4. Smoke puff limiter (included in ECU).
5. Oil filler cap.
6. EGR system (when applicable):
   a) Cooler.
   b) EGR valve.
7. Exhaust brake (when applicable).
8. NOx sensors:
   a) NOx sensor, engine out.
   b) NOx sensor, tail pipe.
9. DOC (when applicable).
10. SCR system:
    a) DEF tank.
    b) DEF tank level, temperature and quality sensors.
    c) DEF hose.
    d) DEF injector.
    e) DEF injector pressure and temperature sensors.
    f) Evaporator.
    g) SCR catalyst inlet temperature sensor.
    h) SCR catalyst including the ammonia-slip catalyst.
    i) SCR control unit (EEC3).

© Scania CV AB 2025, Sweden

11. Miscellaneous items used in the above system:
    a) Electronic control unit (ECU), sensors, wiring harnesses.
    b) Hoses, belts, connectors, assemblies, clamps, fittings tubing, sealing gaskets or devices and mounting hardware.
    c) Pulleys, belts and idlers.
    d) Emission control information label.

IMPORTANT!

This list does not include all expendable maintenance parts.

- Expendable emission related parts requiring scheduled maintenance are warranted until their first scheduled replacement point.
- Emission related parts scheduled for inspection and replacement only as necessary are not considered expendable and if repaired or replaced under warranty shall be warranted for the remaining warranty period.

See Specific Warranty Exclusions below.

General warranty limitations

To retain the dependability of the exhaust emission control originally built into your Scania industrial diesel engine, it is essential that the engine is installed according to Scania installation instructions and emission certificates. Your engine is designed to operate on diesel fuel only. Use of any other fuel may result in your engine no longer operating in compliance with state or federal emissions requirements. The use of alternative fuels shall not void the warranties on any engine certified to use such fuel.

In addition, as the engine owner, You are responsible for the performance of all scheduled maintenance listed in your owner's manual, and all necessary repairs, on your new Scania industrial diesel engine. Scania may deny a warranty claim if the engine or part has failed due to abuse, neglect, improper maintenance or unapproved modifications.

Receipts covering the performance of regular maintenance should be retained in the event questions arise concerning maintenance. The receipts should be transferred to each subsequent owner of the engine with the emission warranted engine. Scania cannot, however, deny warranty solely for the lack of receipts or for your failure to ensure the performance of all scheduled maintenance.

The Warranty covers the cost of diagnosis, repair and replacement parts and services of warranted components and systems performed by an authorized Scania distributor or dealer using genuine Scania parts. You may elect to have maintenance, replacement or repair of these components and systems performed by any repair establishment or individual without invalidating the Warranty.

The use of other than Scania replacement parts also does not invalidate the warranty on other components unless such parts cause damage to warranted parts. However, the cost of such services or parts will not be covered by the Warranty.

You are responsible for initiating the warranty process. The California Air Resources Board suggests that You present your heavy-duty off-road engine to an authorized Scania dealer as soon as a problem exists. The warranty repairs should be completed by the dealer as expeditiously as possible.

IMPORTANT!

Use of replacement parts which are not of equivalent quality may impair the effectiveness of emission control systems. Accordingly, it is recommended that only Scania repair or replacement parts be used for maintenance, repair or replacement of emission control systems.

If other than Scania parts are used for maintenance, repair or replacement, the owner should obtain assurance that such parts are warranted by their manufacturer to be equivalent to genuine Scania parts.

© Scania CV AB 2025, Sweden

Specific warranty exclusions

This warranty **does not** cover:

1. Malfunctions in any part caused by any of the following: misuse, abuse, improper adjustments, modifications, alteration, tampering, disconnection, improper or inadequate maintenance, or use of fuels not recommended for the engine as described in the Operator's Manual.
2. Engine installation, including cooling system, intake system and exhaust system installation, that is not completed in accordance with the Scania installation instructions and emissions certificate for this engine type.
3. Damage resulting from accidents, acts of nature or other events beyond the control of Scania.
4. The replacement of expendable maintenance items such as filters, hoses, belts, oil, thermostat, exhaust system and coolant made in connection with scheduled maintenance services once these parts have been replaced.
5. Replacement items which are not genuine Scania parts or not authorized by Scania.
6. Inconvenience, loss of use of the engine or commercial loss.
7. Any engine on which the actual use cannot be accurately determined due to a failure of the device to track hours of use unrelated to defects in materials or workmanship.
8. Any engine operating outside the United States.

Customer support

In the event that You do not receive the warranty service to which You believe You are entitled under the Warranty, or if You need additional support or information concerning the Warranty, please contact:

Scania USA, Inc.

Address: 121 Interpark Blvd, suite 1002, 78216, San Antonio, Texas

Mailing Adress: 121 Interpark Blvd, suite 1002, 78216, San Antonio, Texas

Telephone: +1 210 403 0007

Fax: +1 210 403 0211

E-mail: na.contact@scania.com

California customers shall also be furnished a copy of the California Emission Control Warranty Statement applicable to each new Scania engine purchased.

© Scania CV AB 2025, Sweden

Emission control warranty statement for California, USA

Your warranty rights and obligations

The California Air Resources Board is pleased to explain the emission control system warranty on your 2025/2026 engine. In California, new heavy-duty off-road engines must be designed, built and equipped to meet the State's stringent anti-smog standards. Scania CV AB must warrant the emission control system on your engine for the periods of time listed below provided there has been no abuse, neglect or improper maintenance of your engine.

Your emission control system may include parts such as the fuel injection system and the air induction system. Also included may be hoses, belts, connectors and other emission-related assemblies.

Where a warrantable condition exists, Scania CV AB will repair your heavy-duty off-road engine at no cost to you including diagnosis, parts and labor.

Manufacturer's warranty coverage

The 2025/2026 heavy-duty off-road engines are warranted for a period of five years or 3,000 hours, whichever occurs first. If any emission-related part on your engine is defective, the part will be repaired or replaced by Scania CV AB.

Owner's warranty responsibilities

- As the off-road engine owner, you are responsible for the performance of the required maintenance listed in your owner's manual. Scania CV AB recommends that you retain all receipts covering maintenance on your off-road engine, but Scania CV AB cannot deny warranty solely for the lack of receipts or for your failure to ensure the performance of all scheduled maintenance.
- As the off-road engine owner, you should however be aware that Scania CV AB may deny you warranty coverage if your off-road engine or a part has failed due to abuse, neglect, improper maintenance or unapproved modifications.
- Your engine is designed to operate on ultra low-sulfur diesel fuel only. Use of any other fuel may result in your engine no longer operating in compliance with California's emissions requirements.
- You are responsible for initiating the warranty process. The ARB suggests that you present your off-road engine to a Scania CV AB dealer as soon as a problem exists. The warranty repairs should be completed by the dealer as expeditiously as possible.

If you have any questions regarding your warranty rights and responsibilities, you should contact Scania U.S.A. Inc +1-210-403-0007.

© Scania CV AB 2025, Sweden

SCR catalytic converter

WARNING!

The SCR catalytic converter contains vanadium pentoxide, a chemical known to the State of California to cause cancer.

The SCR catalytic converter is fitted in the silencer and does not constitute a health hazard during normal use and handling.

When carrying out work on the SCR catalytic converter which may result in exposure to dust, safety precautions must be taken. Such work includes, for example, opening the silencer machining and scrapping the SCR catalytic converter.

Safety precautions when working on the SCR system.

- Inhalation: If dust is inhaled, the person should be provided with fresh air immediately. Seek medical attention.
- Eye contact: Rinse eyes with water immediately. If irritation persists, seek medical attention.
- Skin contact: Wash with water and soap. Remove contaminated clothes.
- Ingestion: If large amounts have been ingested, drink plenty of water and induce vomiting. Seek medical attention.

Environmental hazards

- Vanadium pentoxide is toxic to water organisms and can cause detrimental long term effects to water environment.

Environmental protection measures

- The SCR catalytic converter is a manufactured article that contains vanadium pentoxide, a hazardous substance. Before disposing of, or scrapping, a spent SCR catalytic converter, it should be tested for any hazardous characteristics (ignitability, corrosivity, reactivity, acute hazardousness, and toxicity), as those categories are described in 22 CCR § 66261.30. If the spent SCR catalytic converter exhibits hazardous characteristics and is being disposed of, it will be considered by the State of California to be a hazardous waste subject to Title 22, California Code of Regulations. Before disposing of hazardous waste, review and follow all pertinent federal and California requirements.
- Vanadium pentoxide is a listed commercial chemical product - P120 - pursuant to 22 CCR § 66261.33(e). According to the State of California, commercial chemical products that are discarded or intended to be discarded are hazardous wastes and are subject to all provisions of Title 22, California Code of Regulations. Before disposing of vanadium pentoxide, review and follow all pertinent federal and California requirements.
- If the SCR catalytic converter is opened for maintenance, any dust spillages from the catalyst should be collected and tested for the presence of vanadium pentoxide prior to proper disposal. Dust spillages should also be tested for any hazardous characteristics (ignitability, corrosivity, reactivity, acute hazardousness, and toxicity), as those categories are described in 22 CCR § 66261.30, prior to proper disposal. If the dust contains either vanadium pentoxide or exhibits hazardous characteristics and is being disposed of, it will be considered by the State of California to be a hazardous waste subject to Title 22, California Code of Regulations. Before disposing of hazardous waste, review and follow all pertinent federal and California requirements.

© Scania CV AB 2025, Sweden

- Do not dispose of the spent SCR catalytic converter or its constituent parts into any waterways, storm drains or sanitary sewers.

WARNING!

The SCR catalytic converter contains vanadium pentoxide, a chemical known to the State of California to cause cancer.

Additional considerations when working on the SCR system

- Carry out work on the SCR catalytic converter in all well ventilated area. Use protective goggles and gloves if there is any risk of splashing or spraying of reductant or coolant.
- When engine is running, the exhaust system parts can reach such high temperatures that there is a risk of personal injury. Make sure that the exhaust system temperature has decreased to a suitable level before starting to work.
- The SCR system is heated by water from the engine cooling system. The cooling system runs at overpressure and when the engine is hot the coolant is hot. Do not open any hoses without first stopping the coolant flow in the hose.
- A P3 type respirator/filter mask or a type FFP3 fine dust musk, protective goggles and gloves should be used for any work where there is a risk of exposure to dust from the SCR catalytic converter.
- Use a disposable overall and dispose of it properly after machining.
- Eating, drinking or smoking while working is not permitted.
- Any dust from the SCR catalytic converter should be removed using a vacuum cleaner with microfilter to minimize exposure.
- Make sure that the work surface is cleaned after completed work; Vacuum first then swab.
- Make sure you clean your hands after working with SCR catalytic converter to avoid ingestion.
- Work done on the SCR catalytic converter may generate waste considered by the State of California to be a hazardous waste subject to Title 22, California Code of Regulations. Before disposing of hazardous waste, review and follow all pertinent federal and California requirements.

© Scania CV AB 2025, Sweden

Emission control system warranty for China

General warranty provisions

The emission control systems of your new Scania Power Solutions (“Scania”) industrial diesel engine were designed, built and tested using genuine parts, and were certified as being in conformity with federal emission control regulations. Scania warrants to the original owner, and to each subsequent owner, of a new Scania industrial diesel engine (“You”) that the engine:

1. Was designed, built and equipped so as to conform at the time of sale with all applicable regulations HJ 2014-2020 and GB 20891-2014 ,for their full useful life and designed, built and equipped so as to conform with all applicable regulations adopted by the National Standard of the People’s Republic of China of pursuant to its authority.
2. Is free from defects in material and workmanship which would cause such engine to-fail to conform to applicable regulations for its warranty period or otherwise cause the failure of a warranted part to be identical in all material respects to the part as described in the engine manufacturer's application for certification. Where a warrantable condition exists, Scania will repair your heavy-duty off-road engine at no cost to You including diagnosis, parts, and labour.

Warranty period

This warranty shall apply for one of the following periods, whichever occurs first:

- 3,000 hours of operation as determined by a device to measure hours of use, or
- Five years

Each engine is equipped with a device to measure hours of use. If that device fails to account for hours of use due to defects in materials or workmanship, the engine shall be warranted for a period of five years. The warranty period shall begin on the date the engine is delivered to the first ultimate purchaser who, in good faith, purchases the engine for purposes other than imminent resale.

The Warranty on emission-related parts shall be interpreted as follows:

1. Any warranted part which is not scheduled for replacement as required maintenance in Scania's written instructions for maintenance and use of the engine by owner shall be warranted for the warranty period defined above. If any such part fails during the period of warranty coverage, it shall be repaired or replaced by the engine manufacturer according to Subsection (4) below. Any such part repaired or replaced under the Warranty shall be warranted for the remaining warranty period.
2. Any warranted part which is scheduled only for regular inspection in Scania's written instructions for maintenance and use of the engine by owner shall be warranted for the warranty period defined above. A statement in such written instructions to the effect of “repair or replace as necessary” shall not reduce the period of warranty coverage. Any such part repaired or replaced under warranty shall be warranted for the remaining warranty period.
3. Any warranted part which is scheduled for replacement as required maintenance in Scania's written instructions for maintenance and use of the engine by owner shall be warranted for the period of time prior to the first scheduled replacement point for that part. If the part fails prior to the first scheduled replacement, the part shall be repaired or replaced by the engine manufacturer according to Subsection (4) below. Any such part repaired or replaced under warranty shall be warranted for the remainder of the period prior to the first scheduled replacement point for the part.
4. Repair or replacement of any warranted part under the warranty provisions of this article shall be performed at no charge to the owner at a warranty station.
5. Not withstanding the provisions of Subsection (4) above, warranty services or repairs shall be provided at all manufacturer distribution centers that are franchised to serve the subject engines.
6. The owner shall not be charged for diagnostic labor that leadsto the determination that a warranted part is in fact defective, provided that such diagnostic work is performed at a warranty station.
7. The engine manufacturer shall be liable for damages to other engine components proxi-

© Scania CV AB 2025, Sweden

mately caused by a failure under warranty of any warranted part.

8. Throughout the engine's warranty period defined above, the engine manufacturer shall maintain a supply of warranted parts sufficient to meet the expected demand for such parts.
9. Any replacement part may be used in the performance of any maintenance or repairs and must be provided without charge to the owner. It is not necessary for replacement parts to be the same brand or by the same manufacturer as the original part sold with the engine. Such use shall not reduce the warranty obligations of the engine manufacturer.
10. Add-on or modified parts, may not be used. The use of any non-exempted add-on or modified parts shall be grounds for disallowing a warranty claim made in accordance with this article. The engine manufacturer shall not be liable under this article to warrant failures of warranted parts caused by the use of a non-exempted add-on or modified part.

Parts covered by the Warranty

The following is a list of parts considered to be part of the Emission Control Systems covered by the Emission Warranty for Scania industrial engines:

1. Fuel injection system.
2. Air induction system.
3. Exhaust manifold system.
4. Smoke puff limiter (included in ECU).
5. Oil filler cap.
6. EGR system(when applicable).
   a) Cooler.
   b) EGR valve.
7. Exhaust brake (when applicable).
8. NOx sensors:
   a) NOx sensor, engine out.
   b) NOx sensor, tail pipe.
9. DOC (when applicable).
10. SCR system:
    a) DEF tank.
    b) DEF tank level, temperature and quality sensors.
    c) DEF hose.
    d) DEF injector.
    e) DEF injector pressure and temperature sensors.
    f) Evaporator.
    g) SCR catalyst inlet temperature sensor.
    h) SCR catalyst including the ammonia-slip catalyst.
    i) SCR control unit (EEC3).
    j) DPF.

IMPORTANT!

This list does not include all expendable maintenance parts.

- Expendable emission related parts requiring scheduled maintenance are warranted until their first scheduled replacement point.
- Emission related parts scheduled for inspection and replacement only as necessary are not considered expendable and if repaired or replaced under warranty shall be warranted for the remaining warranty period.

See Specific Warranty Exclusions below.

© Scania CV AB 2025, Sweden

General warranty limitations

To retain the dependability of the exhaust emission control originally built into your Scania industrial diesel engine, it is essential that the engine is installed according to Scania installation instructions and emission certificates. Your engine is designed to operate on diesel fuel only. Use of any other fuel may result in your engine no longer operating in compliance with state or federal emissions requirements. The use of alternative fuels shall not void the warranties on any engine certified to use such fuel.

In addition, as the engine owner, You are responsible for the performance of all scheduled maintenance listed in your owner's manual, and all necessary repairs, on your new Scania industrial diesel engine. Scania may deny a warranty claim if the engine or part has failed due to abuse, neglect, improper maintenance or unapproved modifications.

Receipts covering the performance of regular maintenance should be retained in the event questions arise concerning maintenance. The receipts should be transferred to each subsequent owner of the engine with the emission warranted engine. Scania cannot, however, deny warranty solely for the lack of receipts or for your failure to ensure the performance of all scheduled maintenance.

The Warranty covers the cost of diagnosis, repair and replacement parts and services of warranted components and systems performed by an authorized Scania distributor or dealer using genuine Scania parts. You may elect to have maintenance, replacement or repair of these components and systems performed by any repair establishment or individual without invalidating the Warranty.

The use of other than Scania replacement parts also does not invalidate the warranty on other components unless such parts cause damage to warranted parts. However, the cost of such services or parts will not be covered by the Warranty.

You are responsible for initiating the warranty process. It is suggested that You present your heavy-duty off-road engine to an authorized Scania dealer as soon as a problem exists. The warranty repairs should be completed by the dealer as expeditiously as possible.

IMPORTANT!

Use of replacement parts which are not of equivalent quality may impair the effectiveness of emission control systems. Accordingly, it is recommended that only Scania repair or replacement parts be used for maintenance, repair or replacement of emission control systems.

If other than Scania parts are used for maintenance, repair or replacement, the owner should obtain assurance that such parts are warranted by their manufacturer to be equivalent to genuine Scania parts.

© Scania CV AB 2025, Sweden

Specific warranty exclusions

This warranty **does not** cover:

1. Malfunctions in any part caused by any of the following: misuse, abuse, improper adjustments, modifications, alteration, tampering, disconnection, improper or inadequate maintenance, or use of fuels not recommended for the engine as described in the Operator's Manual.
2. Engine installation, including cooling system, intake system and exhaust system installation, that is not completed in accordance with the Scania installation instructions and emissions certificate for this engine type.
3. Damage resulting from accidents, acts of nature or other events beyond the control of Scania.
4. The replacement of expendable maintenance items such as filters, hoses, belts, oil, thermostat, exhaust system and coolant made in connection with scheduled maintenance services once these parts have been replaced.
5. Replacement items which are not genuine Scania parts or not authorized by Scania.
6. Inconvenience, loss of use of the engine or commercial loss.
7. Any engine on which the actual use cannot be accurately determined due to a failure of the device to track hours of use unrelated to defects in materials or workmanship.
8. Any engine operating outside China.

Customer support

In the event that You do not receive the warranty service to which You believe You are entitled under the Warranty, or if You need additional support or information concerning the Warranty, please contact:

Scania China.

Address: 23-24F, Capital Square, 268 Hentong Road, Jing'an District, Shanghai 200070

Mailing address: 23-24F, Capital Square, 268 Hentong Road, Jing'an District, Shanghai 200070

Telephone: +86-21-6618 9900

Fax: +86-21-6618 9900

E-mail: lucas.liu@scania.com

© Scania CV AB 2025, Sweden

Emission control system warranty for South Korea

General warranty provisions

The emission control systems of your new Scania Power Solutions ("Scania") industrial diesel engine were designed, built and tested using genuine parts, and were certified as being in conformity with federal emission control regulations. Scania warrants to the original owner, and to each subsequent owner, of a new Scania industrial diesel engine ("You") that the engine:

1. Was designed, built and equipped so as to conform at the time of sale with all applicable regulations MOE, Clean Air Conservation Act, Enforcement Decree of the Clean Air Conservation Act and some others, for their full useful life and designed, built and equipped so as to conform with all applicable regulations.
2. Is free from defects in material and workmanship which would cause such engine to-fail to conform to applicable regulations for its warranty period or otherwise cause the failure of a warranted part to be identical in all material respects to the part as described in the engine manufacturer's application for certification. Where a warrantable condition exists, Scania will repair your heavy-duty off-road engine at no cost to You including diagnosis, parts, and labour.

Warranty period

This warranty shall apply for one of the following periods, whichever occurs first:

- 3,000 hours of operation as determined by a device to measure hours of use, or
- Five years

Each engine is equipped with a device to measure hours of use. If that device fails to account for hours of use due to defects in materials or workmanship, the engine shall be warranted for a period of five years. The warranty period shall begin on the date the engine is delivered to the first ultimate purchaser who, in good faith, purchases the engine for purposes other than imminent resale.

The Warranty on emission-related parts shall be interpreted as follows:

1. Any warranted part which is not scheduled for replacement as required maintenance in Scania's written instructions for maintenance and use of the engine by owner shall be warranted for the warranty period defined above. If any such part fails during the period of warranty coverage, it shall be repaired or replaced by the engine manufacturer according to Subsection (4) below. Any such part repaired or replaced under the Warranty shall be warranted for the remaining warranty period.
2. Any warranted part which is scheduled only for regular inspection in Scania's written instructions for maintenance and use of the engine by owner shall be warranted for the warranty period defined above. A statement in such written instructions to the effect of "repair or replace as necessary" shall not reduce the period of warranty coverage. Any such part repaired or replaced under warranty shall be warranted for the remaining warranty period.
3. Any warranted part which is scheduled for replacement as required maintenance in Scania's written instructions for maintenance and use of the engine by owner shall be warranted for the period of time prior to the first scheduled replacement point for that part. If the part fails prior to the first scheduled replacement, the part shall be repaired or replaced by the engine manufacturer according to Subsection (4) below. Any such part repaired or replaced under warranty shall be warranted for the remainder of the period prior to the first scheduled replacement point for the part.
4. Repair or replacement of any warranted part under the warranty provisions of this article shall be performed at no charge to the owner at a warranty station.
5. Although the provisions of Subsection (4) above, warranty services or repairs shall be provided at all manufacturer distribution centers that are franchised to serve the subject engines.
6. The owner shall not be charged for diagnostic labor that leadsto the determination that a warranted part is in fact defective, provided that such diagnostic work is performed at a warranty station.
7. The engine manufacturer shall be liable for damages to other engine components proxi-

© Scania CV AB 2025, Sweden

mately caused by a failure under warranty of any warranted part.

8. Throughout the engine's warranty period defined above, the engine manufacturer shall maintain a supply of warranted parts sufficient to meet the expected demand for such parts.
9. Any replacement part may be used in the performance of any maintenance or repairs and must be provided without charge to the owner. It is not necessary for replacement parts to be the same brand or by the same manufacturer as the original part sold with the engine. Such use shall not reduce the warranty obligations of the engine manufacturer.
10. Add-on or modified parts, may not be used. The use of any non-exempted add-on or modified parts shall be grounds for disallowing a warranty claim made in accordance with this article. The engine manufacturer shall not be liable under this article to warrant failures of warranted parts caused by the use of a non-exempted add-on or modified part.

Parts covered by the Warranty

The following is a list of parts considered to be part of the Emission Control Systems covered by the Emission Warranty for Scania industrial engines:

1. Fuel injection system.
2. Air induction system.
3. Exhaust manifold system.
4. Smoke puff limiter (included in ECU).
5. Oil filler cap.
6. Exhaust brake (when applicable).
7. NOx sensors:
   a) NOx sensor, engine out.
   b) NOx sensor, tail pipe.
8. DOC (when applicable).
9. SCR system:
   a) DEF tank.
   b) DEF tank level, temperature and quality sensors.
   c) DEF hose.
   d) DEF injector.
   e) DEF injector pressure and temperature sensors.
   f) Evaporator.
   g) SCR catalyst inlet temperature sensor.
   h) SCR catalyst including the ammonia-slip catalyst.
   i) SCR control unit.
   j) Particulate filter.

IMPORTANT!

This list does not include all expendable maintenance parts.

- Expendable emission related parts requiring scheduled maintenance are warranted until their first scheduled replacement point.
- Emission related parts scheduled for inspection and replacement only as necessary are not considered expendable and if repaired or replaced under warranty shall be warranted for the remaining warranty period.

See Specific Warranty Exclusions below.

© Scania CV AB 2025, Sweden

General warranty limitations

To retain the dependability of the exhaust emission control originally built into your Scania industrial diesel engine, it is essential that the engine is installed according to Scania installation instructions and emission certificates. Your engine is designed to operate on diesel fuel only. Use of any other fuel may result in your engine no longer operating in compliance with state or federal emissions requirements. The use of alternative fuels shall not void the warranties on any engine certified to use such fuel.

In addition, as the engine owner, You are responsible for the performance of all scheduled maintenance listed in your owner's manual, and all necessary repairs, on your new Scania industrial diesel engine. Scania may deny a warranty claim if the engine or part has failed due to abuse, neglect, improper maintenance or unapproved modifications.

Receipts covering the performance of regular maintenance should be retained in the event questions arise concerning maintenance. The receipts should be transferred to each subsequent owner of the engine with the emission warranted engine. Scania cannot, however, deny warranty solely for the lack of receipts or for your failure to ensure the performance of all scheduled maintenance.

The Warranty covers the cost of diagnosis, repair and replacement parts and services of warranted components and systems performed by an authorized Scania distributor or dealer using genuine Scania parts. You may elect to have maintenance, replacement or repair of these components and systems performed by any repair establishment or individual without invalidating the Warranty.

The use of other than Scania replacement parts also does not invalidate the warranty on other components unless such parts cause damage to warranted parts. However, the cost of such services or parts will not be covered by the Warranty.

You are responsible for initiating the warranty process. It is suggested that You present your heavy-duty off-road engine to an authorized Scania dealer as soon as a problem exists. The warranty repairs should be completed by the dealer as expeditiously as possible.

IMPORTANT!

Use of replacement parts which are not of equivalent quality may impair the effectiveness of emission control systems. Accordingly, it is recommended that only Scania repair or replacement parts be used for maintenance, repair or replacement of emission control systems.

If other than Scania parts are used for maintenance, repair or replacement, the owner should obtain assurance that such parts are warranted by their manufacturer to be equivalent to genuine Scania parts.

© Scania CV AB 2025, Sweden

Specific warranty exclusions

This warranty **does not** cover:

1. Malfunctions in any part caused by any of the following: misuse, abuse, improper adjustments, modifications, alteration, tampering, disconnection, improper or inadequate maintenance, or use of fuels not recommended for the engine as described in the Operator's Manual.
2. Engine installation, including cooling system, intake system and exhaust system installation, that is not completed in accordance with the Scania installation instructions and emissions certificate for this engine type.
3. Damage resulting from accidents, acts of nature or other events beyond the control of Scania.
4. The replacement of expendable maintenance items such as filters, hoses, belts, oil, thermostat, exhaust system and coolant made in connection with scheduled maintenance services once these parts have been replaced.
5. Replacement items which are not genuine Scania parts or not authorized by Scania.
6. Inconvenience, loss of use of the engine or commercial loss.
7. Any engine on which the actual use cannot be accurately determined due to a failure of the device to track hours of use unrelated to defects in materials or workmanship.
8. Any engine operating outside South Korea.

Customer support

In the event that You do not receive the warranty service to which You believe You are entitled under the Warranty, or if You need additional support or information concerning the Warranty, please contact:

Scania Korea.

Adress: 150, Oegukgieop-ro, Sanam-myeon, Sacheon, Kyungnam, South Korea

Mailing adress: 150, Oegukgieop-ro, Sanam-myeon, Sacheon, Kyungnam, South Korea

Telephone: +82-55-851-5397

Fax: +82-55-851-5195

E-mail: hyunggu.lee@scania.com

© Scania CV AB 2025, Sweden

Introduction

This Operator's manual describes the operation and maintenance of Scania industrial engines.

The engines are direct-injection, liquid-cooled, four-stroke diesel engines with turbochargers. Certain engines are also equipped with exhaust gas aftertreatment management systems.

The engines are available with different output and engine speed settings. Engine power for the engine ordered is indicated on a plate located on the engine control unit.

Note:

Only standard components are described in the operator's manual. Information about special equipment is contained in instructions from the various manufacturers.

To ensure the maximum performance and the longest service life for the engine, remember the following:

- Read through the Operator's manual before starting to use the engine. Even regular users of Scania engines will get new information from the Operator's manual.
- Always follow the maintenance instructions.
- Read the section on safety carefully.
- Get to know your engine so that you know what it can do and how it works.
- Always contact a workshop with qualified personnel for maintenance and repair.

The information in this Operator's manual was correct at the time of going to press. Scania reserves the right to make alterations without prior notice.

Certification

IMPORTANT!

For Scania to guarantee that the engine corresponds to its certified configuration, and take responsibility for any damage and injuries that occur, maintenance must be carried out in accordance with the instructions in this Operator's manual.

An emissions certified engine fulfils the emissions requirements for a particular range of application.

On each emissions certified engine there is a label which shows which requirements the engine fulfils. Scania guarantees that each such engine fulfils the emissions requirements for the range of application for which it is certified.

The following are required for the certified engine to fulfil the emissions requirements once it has been taken into service:

- Maintenance is to be carried out in accordance with the instructions in this Operator's manual.
- Maintenance and repairs of injection equipment are to be carried out by an authorised Scania workshop.
- The engine may only be modified with equipment that has been approved by Scania.
- Seals may be broken and setting data edited only once approval has been granted by Scania. Modifications may be made by authorised personnel only.
- Modifications affecting the exhaust and intake systems must be approved by Scania.

Otherwise, the instructions in the Operator's manual for the running and maintenance of the engine shall apply. Follow the safety precautions on the following pages.

© Scania CV AB 2025, Sweden

Power classes

Scania supplies engines in 4 different power classes:

ICFN, Continuous service: Intended for continuous operation and an unlimited number of operating hours per year at a total load factor of 100% provided that the engine speed is at a minimum of 85% of the nominal value of the engine. If the engine speed is below 85% of the nominal value, the rated power is available for 1 hour in a 6-hour period and the average load must not exceed 80% of the power at the current rotational speed.

IFN, Intermittent service: Intended for periodic use, where the rated power is available for one hour per six-hour period. The total load factor must not exceed 80 % of the rated power. Unlimited number of operational hours per year.

PRP, Prime Power: Intended for continual use and an unlimited number of operational hours with varying loads. For continuous operation and unlimited annual operating time with varying loads. Max. average load factor of 70% of rated power during 24 hours of operation. 1 hour/12 hour period over 100% load. Max. 25 hours accumulated service time over 100% load per year. This power class applies to single-speed engines.

COP, Continuous power: Intended for continual use with a non-varying load and an unlimited number of operational hours.

The engine serial numbers and power classes for the engines that are used in this installation should be listed below: You can find the power class of your engine in the engine type data sheet on the Scania website, www.scania.com.

Engine serial number: _____

Motor type: _____

Engine power: _____ kW at _____ rpm

☐ **ICFN, Continuous service**

☐ **IFN, Intermittent service**

☐ **PRP, Prime power**

☐ **COP, Continuous Power**

© Scania CV AB 2025, Sweden

Environment and safety

Environmental liability

Scania develops and produces engines that are as environmentally-friendly as possible. Scania has made major investments in the reduction of harmful exhaust emissions in order to fulfil the environmental requirements in force in almost every market.

At the same time, we have been able to maintain a high level of performance quality and operating economy for Scania engines. To maintain these throughout the entire service life of the engine, it is important for the user to follow the instructions on driving, maintenance and fuel, lubricating oil and coolant as outlined in the Operator's manual.

Other green initiatives taken include ensuring that, following maintenance and repair, waste that is harmful to the environment (for example oil, fuel, coolant, filters and batteries) is disposed of accordance with the applicable environmental requirements.

Information on parts with particularly hazardous substances

Note:

A number of component parts on the engine contain materials with particularly hazardous substances.

The substances have properties that can have a serious and lasting effect on human health and the environment.

If a part or component parts contain more than 0.1% by weight of a substance listed on the REACH candidate list, the supplier must provide information about the substance.

The requirement is defined in Article 33 of the REACH Regulation (EC 2006/1907) and applies within the EU, Liechtenstein, Norway and Iceland.

https://echa.europa.eu/candidate-list-table.

A list of engine parts containing substances in the candidate list is provided by Scania.

https://sure.scania.com/reach.

According to Article 9 of the EU Waste Framework Directive ((EU) 2018/851), manufacturers of parts containing more than 0.1% by weight of a particular hazardous substance must communicate this to the EU Chemicals Agency (ECHA).

Scania supplies individual notification numbers in SCIP for affected vehicles.

https://sure.scania.com/

The notification number can be used to search the ECHA SCIP database.

https://echa.europa.eu/scip-database

Safety

The following pages contain a summary of the safety precautions to be complied with when operating and maintaining Scania engines. The equivalent text can also be found under the relevant maintenance item.

To prevent damage to the engine and to ensure that it runs optimally, follow the instructions in the warnings and advisories.

If the instructions are not followed, the warranty can cease to apply.

© Scania CV AB 2025, Sweden

Different types of advisory

WARNING!

All advisories preceded by Warning! are very important. They warn of serious faults and incorrect operation that could lead to personal injury. **Example:**

Block the starting device when working on the engine. If the engine starts unexpectedly, there is a serious risk of injury.

IMPORTANT!

Advisories preceded by Important! warn of faults and incorrect operation that could lead to equipment being damaged. **Example:**

An excessive coolant temperature can cause engine damage.

Note:

Advisories preceded by Note: refer to information important to ensure the best possible operation and functionality. **Example:**

Leave the engine off for at least 7 minutes before you check the oil level.

Environment

This Operator's manual contains specially highlighted text with instructions to help protect the environment during maintenance. **Example:**

Use a suitable container. The fuel collected must be disposed of as specified in national and international laws and regulations.

© Scania CV AB 2025, Sweden

Warnings and advisories

Smoking

WARNING!

Smoking is prohibited

- in the vicinity of flammable or explosive material, e.g. fuel, oils, batteries, chemicals
- when refuelling and in the vicinity of the filling station
- when working on the fuel system

Safety precautions for driving

Daily maintenance

Always carry out a visual inspection of the engine and engine compartment before starting the engine or when the engine has been switched off after operation.

This inspection should be done to detect fuel, oil or coolant leaks, or anything else that may require corrective action.

Fuel

WARNING!

The wrong fuel grade can cause breakdowns or stoppages by causing the injection system to malfunction. This can cause damage to the engine and, possibly, personal injury.

REQUIREMENT!

Use only fuel which fulfils the requirements in the Quality requirements for fuel section.

Refuelling

WARNING!

During refuelling there is a risk of fire and explosion. The engine must be switched off and smoking is prohibited.

Never overfill the tank as the fuel needs space to expand. Make sure that the filler cap is fully closed.

Hazardous gases

WARNING!

Only start the engine in a well-ventilated area. The exhaust gases contain carbon monoxide and nitrogen oxides, which are toxic.

When the engine is run in an enclosed space, there must be an effective device to extract exhaust gases and crankcase gases.

© Scania CV AB 2025, Sweden

Starter lock

IMPORTANT!

If the instrument panel is not fitted with a starter lock, the engine compartment should be locked to prevent unauthorised personnel from starting the engine. Alternatively, a lockable master switch or battery master switch can be used.

Starter gas

WARNING!

Never use starter gas or similar agents to help start the engine. This can cause an explosion in the intake manifold and possible injury.

Driving

WARNING!

The engine must not be run in environments where there is a risk of explosion, as all of the electrical or mechanical components can generate sparks.

Approaching a running engine always poses a safety risk. Parts of the body, clothes or dropped tools can get caught in rotating parts such as the fan and cause injury. For personal safety all rotating parts and hot surfaces must be fitted with guards.

Safety precautions for handling materials

Fuel and lubricating oil

WARNING!

All fuels and lubricants as well as many chemicals are flammable. Always follow the instructions on the relevant packaging.

The work must be carried out on a cold engine. Fuel leaks and spillages on hot surfaces can cause fire.

Store used rags and other flammable materials safely so as to avoid spontaneous combustion.

Batteries

WARNING!

The batteries contain and form oxyhydrogen gas, particularly during charging. Oxyhydrogen gas is flammable and highly explosive.

There must be no smoking, naked flames or sparks near the batteries or the battery compartment. Incorrect connection of a battery cable or jump lead can cause a spark, which can cause the battery to explode.

© Scania CV AB 2025, Sweden

Chemicals

WARNING!

Most chemicals such as glycol, anti-corrosive agents, preservative oils and degreasing agents, are hazardous to health. Some chemicals, such as preservative oil, are also flammable. Always follow the safety precautions on the packaging.

Store chemicals and other materials which are hazardous to health in approved and clearly marked containers, where they are inaccessible to unauthorised persons.

Environment

Excess and used chemicals must be disposed of as specified in national and international laws and regulations.

Reductant

Reductant (AdBlue®, DEF, ARLA 32 eller AUS 32) is used in the reductant tank for engines fitted with an SCR system.

The reductant is not toxic, but it is still important to observe the following when working on the reductant circuit:

- If reductant comes into contact with your skin: Wash it off with soap and plenty of water.
- If reductant splashes in your eyes: Rinse immediately using an eye bath and then seek medical attention.
- Change out of clothes which have spills on.

REQUIREMENT!

Use only reductant which fulfils the requirements in the Reductant for SCR section.

Safety precautions for maintenance

Switch off the engine

WARNING!

Working on a running engine always poses a safety risk. Parts of the body, clothes or dropped tools can get caught in rotating parts and cause injury.

Always switch off the engine before carrying out maintenance, unless otherwise indicated.

Make it impossible to start the engine: Remove any starter key, or cut the power using the main power switch or battery master switch and lock them.

Fix a warning plate somewhere appropriate, showing that work is being carried out on the engine.

Hot surfaces and fluids

WARNING!

There is always a risk of sustaining burns when an engine is hot. Particularly hot parts are branch pipes, turbochargers, oil sumps, and hot coolant and oil in pipes and hoses.

© Scania CV AB 2025, Sweden

Lubrication system

WARNING!

Hot oil can cause burns and skin irritation. Wear protective gloves and eye protection when changing hot oil.

Make sure that there is no pressure in the lubrication system before starting work on it.

Make sure that the oil filler cover is fitted when starting and driving in order to avoid oil escaping.

Environment

Used oil must be disposed of as specified in national and international laws and regulations.

Cooling system

WARNING!

Never open the coolant filler cap when the engine is hot. Hot coolant and steam may spray out and cause burns. If the cover has to be opened do it slowly to release the pressure before removing the cover. Wear protective gloves as the coolant is still very hot.

Avoid skin contact with coolant as this may cause irritation to the skin. Wear eye protection and gloves when handling coolant.

Ethylene glycol can be fatal if ingested.

Environment

Used coolant must be disposed of as specified in national and international laws and regulations.

Fuel system

WARNING!

Maintenance and repairs of injection equipment are to be carried out by an authorised Scania workshop.

Always use Scania spare parts for the fuel and electrical systems. Scania spare parts are designed to minimise the risk of fire and explosion.

Environment

Use a suitable container. The fuel collected must be disposed of as specified in national and international laws and regulations.

© Scania CV AB 2025, Sweden

Exhaust gas aftertreatment

IMPORTANT!

Cleanliness is very important when working on the reductant circuit. Clean thoroughly around all parts to be dismantled to prevent dirt from entering the system.

When working on the exhaust gas aftertreatment management system, the reductant connections may only be lubricated with an aqueous soft soap solution or with distilled water with a 3% urea mixture. Any other types of lubricants may block and damage the components in the exhaust gas aftertreatment management system.

Reductant causes certain metals to corrode. Always rinse away reductant spillage on connections and other parts with lukewarm water to prevent corrosion. If reductant seeps into electrical connections or electrical cables, these must be renewed.

WARNING!

When the engine is running, the exhaust system parts can reach such high temperatures that there is a risk of personal injury. Make sure that the temperature has fallen to a suitable level before starting work.

WARNING!

Respiratory protective equipment/filter mask of the P3 type, eye protection and gloves should be used for any work where there is a risk of exposure to hazardous particles from the particulate filter. Safety clearance for unprotected people is 3 m.

Any particles must be removed with a vacuum cleaner to minimise exposure. The vacuum cleaner must be equipped with a HEPA filter that can filter out particles down to a particle size of 0.3 µm.

To avoid ingestion, do not eat, drink or smoke while work is in progress. Make sure you clean your hands after working on the particulate filter.

Environment

The oxidation catalytic converter, the particulate filter and the SCR catalytic converter contain precious metals and must be processed in compliance with local regulations.

© Scania CV AB 2025, Sweden

Electrical system

WARNING!

Switch off the engine and switch off the power by disconnecting the electrical cables to the battery. External power supplies to extra equipment in the engine must also be disconnected.

Always use Scania spare parts for the fuel and electrical systems. Scania spare parts are designed to minimise the risk of fire and explosion.

Electric welding

WARNING!

When carrying out welding work on and near the engine, disconnect the battery and alternator leads. Pull out the multi-pin connector for the engine control unit as well.

Connect the welding clamp close to the component to be welded. The welding clamp must not be connected to the engine, or so that the current can cross a bearing.

When welding is finished:

1. Connect the alternator and engine control unit cables.
2. Connect the batteries.

Batteries

WARNING!

The batteries contain highly corrosive sulphuric acid. Take care to protect your eyes, skin and clothes when charging or handling batteries. Wear protective gloves and eye protection.

If sulphuric acid comes into contact with your skin: Wash it off with soap and plenty of water. If it splashes in your eyes: Rinse immediately with plenty of water and seek medical attention.

Environment

Used batteries must be disposed of as specified in national and international laws and regulations.

Before starting

WARNING!

Ensure that all guards are in place before starting the engine. Ensure that no tools or other objects have been left on the engine.

The air filter must be fitted before starting the engine. Otherwise there is a risk of objects being sucked into the compressor impeller or of injury if you come into contact with the air filter.

Cybersecurity

IMPORTANT!

The machine manufacturer is responsible for ensuring that all engine management communication is protected against all forms of cyber attack.

The machine manufacturer is also responsible for ensuring the engine can be operated safely in all conditions, including the option of shutting off the engine in the event of disruption to communications with or without engine control.

© Scania CV AB 2025, Sweden

Engine data plate

The engine data plate indicates, in the form of a code, the engine type, its size and applications. It also indicates the engine type power range and the nominal engine speed. The engine's EU type approval for exhaust emissions is indicated under *Output*, where applicable.

The engine power is stated on a plate which is located on the engine control unit. The engine serial number is stamped onto the top of the cylinder block at the front right.

Example: DC09 085A

DC	Turbocharged diesel engine with air-cooled charge air cooler.
09	Displacement in whole dm^3.
085	Performance and certification code. The code indicates, together with the application code, the normal gross engine output.
A	Code for application. A means for general industrial use.

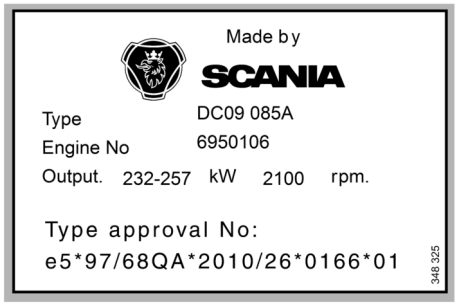

Example of an engine data plate.

© Scania CV AB 2025, Sweden

Component identification

Engine

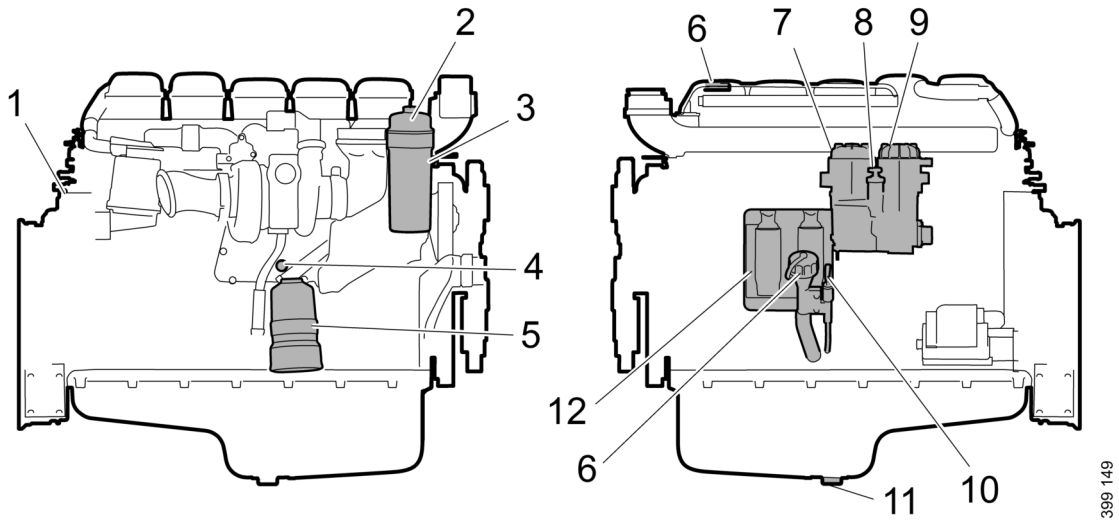

The illustration shows a normal version of a DC09 engine. The engine ordered may have different equipment.

1. *Engine data plate*
2. *Oil filter*
3. *Engine serial number, stamped into the cylinder block*
4. *Nipple for draining and filling coolant*
5. *Centrifugal oil cleaner*
6. *Oil filler*
7. *Water separating prefilter for fuel*
8. *Hand pump for fuel*
9. *Fuel filter*
10. *Oil dipstick*
11. *Oil plug*
12. *Motor control unit*

© Scania CV AB 2025, Sweden

Exhaust gas aftertreatment

Distributed system

Applies to the following DC09 engines	
EU Stage V	All
China IV	All

The illustration provides an overview of exhaust gas aftertreatment management system components.

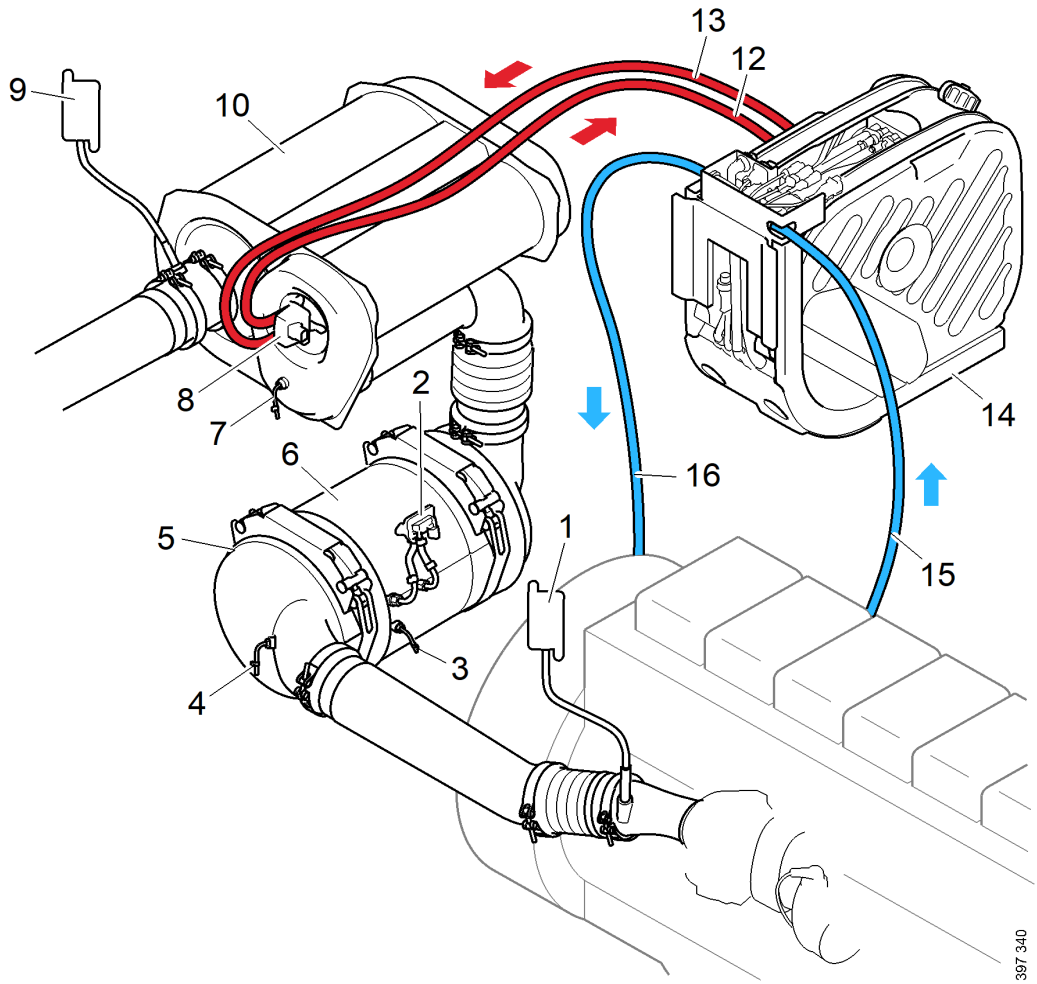

1. NO_xsensors with control unit
2. Differential pressure sensor
3. Exhaust gas temperature sensor
4. Exhaust gas temperature sensor
5. Oxidation catalytic converter
6. Particulate filter
7. Exhaust gas temperature sensor
8. Reductant doser
9. NO_xsensors with control unit
10. SCR catalytic converter
11. Evaporator
12. Reductant return hose
13. Reductant pressure hose
14. Reductant tank
15. Coolant hose for tank and pump heating
16. Coolant hose, return from tank and pump heating

© Scania CV AB 2025, Sweden

SCR system

Applies to the following DC09 engines	
EU Stage IV	All
EU Stage IIIB	All
US Tier 4f	All
US Tier 4i	All

The illustration provides an overview of SCR system components.

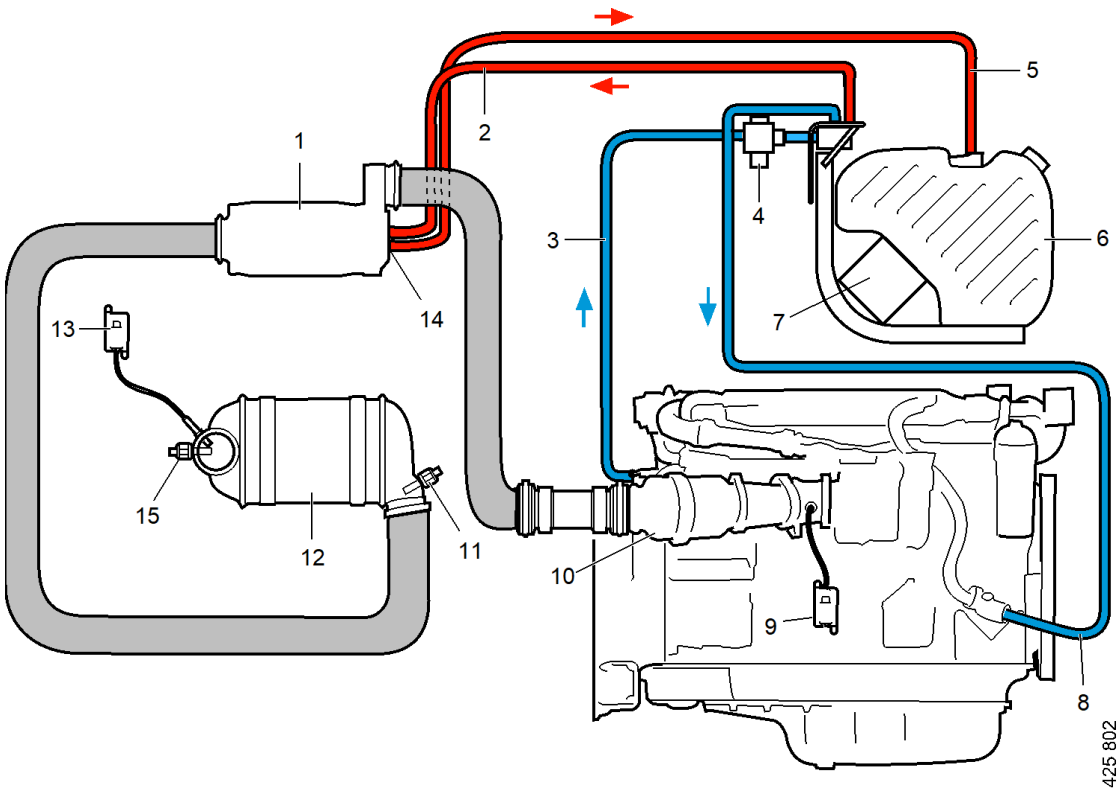

1. Evaporator
2. Reductant pressure hose
3. Coolant hose for tank and pump heating
4. Coolant valve
5. Reductant return hose
6. Reductant tank
7. Reductant pump and control unit
8. Coolant hose, return from tank and pump heating
9. NO_x sensors with control unit[1]
10. Oxidation catalytic converter[1]
11. Exhaust gas temperature sensor
12. SCR catalytic converter
13. NO_x sensors with control unit
14. Reductant doser
15. Exhaust gas temperature sensor[2]

1. Only DC09 084/384/085/385/086/386/387/089/389A.
2. Only US Tier 4f with improved thermal control.

© Scania CV AB 2025, Sweden

Starting and running

Checks before first start

Before the engine is started for the first time, carry out the maintenance items listed under First start in the maintenance schedule. Check the following:

- Oil level.
- Coolant.
- Fuel level.
- Fluid level in batteries.
- Battery state of charge.
- Condition of the drive belt.
- Level in the reductant tank, if the engine is fitted with an SCR system.

See also Maintenance intervals.

IMPORTANT!

Running the engine without reductant in the reductant tank violates emissions legislation and will damage the SCR system.

Reductant tank

Reductant tanks come in 5 different sizes. The volumes indicated for each tank are filling volumes.

1. 38 litres (10 US gallons).
2. 60 litres (15.8 US gallons).
3. 45 litres (11.9 US gallons).
4. 63 litres (16.6 US gallons).
5. 70 litres (18.5 US gallons).

A filler filter with magnet is fitted in the reductant tank to prevent the reductant from becoming contaminated when filling. It is used when refuelling at a filling station. A filler filter without a magnet is also supplied for use when filling manually.

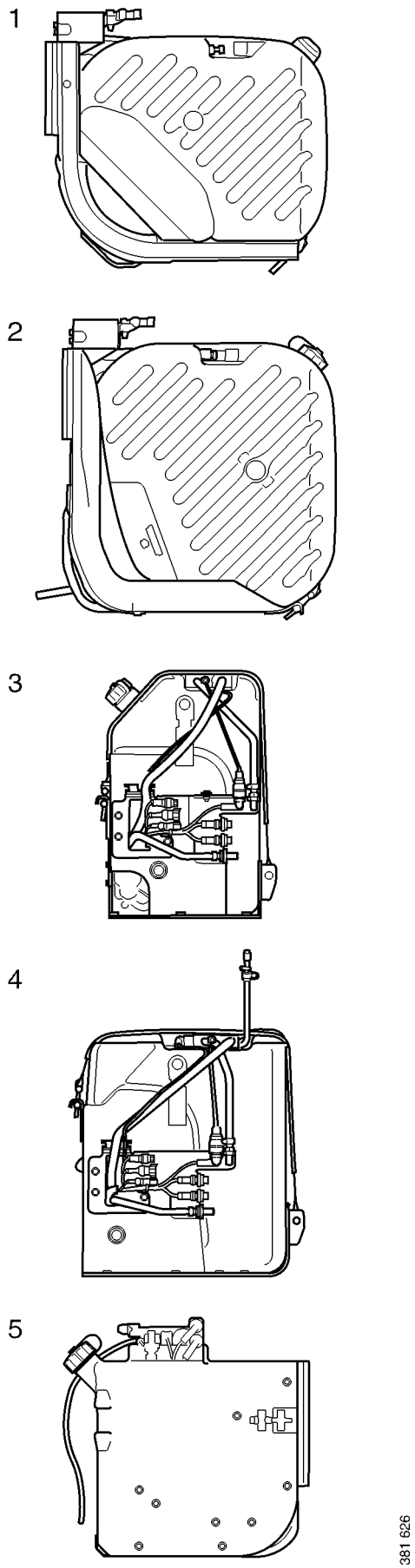

© Scania CV AB 2025, Sweden

Reductant pump

There are two types of reductant pumps:

- Reductant pump with mechanical overflow protection, left-hand one in the illustration
- Reductant pump with electronic overflow protection, right-hand one in the illustration

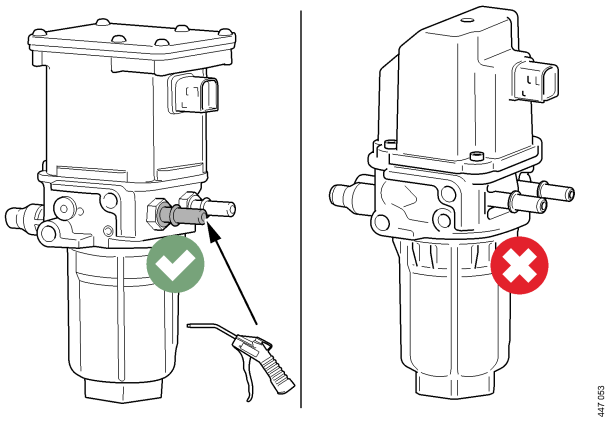

IMPORTANT!

Function tests are carried out on new reductant pumps. This may cause crystallised urea to be present inside the reductant pump.

Before fitting of a new reductant pump with mechanical overflow protection (the left-hand one in the illustration), the pump should be blown clean with compressed air (approx. 6 bar) through the suction union for at least 3 seconds.

The reductant pump (to the right in the illustration) with electronic overflow protection must never be blown clean with compressed air.

Checks before driving

Carry out daily maintenance as described in the maintenance schedule prior to operation. See Maintenance intervals.

© Scania CV AB 2025, Sweden

Starting the engine

WARNING!

Never use starter gas or similar agents to help start the engine. This can cause an explosion in the intake manifold and possible injury.

Only start the engine in a well ventilated area. When the engine is run in an enclosed space, there must be effective devices to extract exhaust gases and crankcase gases.

IMPORTANT!

The starter motor must only be cranked twice for 30 seconds at a time. After that, it must rest for at least 5 minutes before the next attempt to start it.

For environmental reasons the Scania engine has been developed to be started with a low fuel feed. Using unnecessarily large amounts of fuel when starting the engine always results in emissions of unburnt fuel.

1. Open any fuel cock.
2. Disengage the engine.
3. If the engine has a battery master switch: Connect the power using the battery master switch.
4. Start the motor.

If the fuel tank has been run dry or if the engine has not been used for a long time, bleed the fuel system. See the section Venting the fuel system.

Starting at low temperatures and at high altitudes

Take the local environmental requirements into account. Use a fuel heater and engine heater to avoid starting problems and white smoke.

Scania recommends that an engine heater should be used if the engine will be used at temperatures below -10°C (14°F) or at an altitude of more than 2,000 metres.

A low engine speed and a moderate load on a cold engine limits white smoke, gives better combustion and warms up the engine more quickly than warming it up with no load.

Avoid running it longer than necessary at idling speed.

Driving

Check instruments and warning lamps at regular intervals.

Engine speed range

The engine operating speed range is between low idling and the nominal engine speed. The nominal engine speed is indicated on the engine data plate. Low idling can be set between 500 and 975 rpm.

A slightly higher engine speed than the nominal engine speed may occur at low or negative load.

Driving at high altitude

When driving at high altitudes engine power is reduced automatically due to the lower oxygen content in the air. It is then not possible to run the engine at maximum power.

Note:

Driving at an altitude higher than 4,000 metres above sea level is only permitted if it has first been approved by Scania.

Note:

During high dynamic operation, of excavators for example, the EGR cooler may need cleaning. Cleaning must be carried out as described in the Workshop Manual.

Change of rotational speed for single-speed engines

When changing the rotational speed of a single-speed engine, the engine must be stopped completely before the rotational speed is changed.

IMPORTANT!

The engine must not be driven at other rotational speeds than those approved by Scania.

© Scania CV AB 2025, Sweden

Emission control

The system provides a warning if there are faults in the SCR system or if the level of reductant in the reductant tank is too low. In the case of some faults, for example if doser cooling is not working, the torque is reduced.

EMS malfunction warning

The machine interface shows indications for faults in the engine management system.

A yellow warning lamp indicates that the operator should contact a workshop as soon as possible. It is activated in the event of emission-related faults and other faults which may need to be rectified.

Below are some examples of typical faults which illuminate the yellow warning lamp:

- Signal for sensor or actuator lost.
- Engine or exhaust gas aftertreatment system temperature close to hardware limitations.
- System battery voltage outside the normal range.
- Diagnostic trouble code for e.g.:
  - NOx sensor
  - Increase the pressure
  - EGR actuator
  - Adaptation outside limit values

The red warning lamp indicates an emergency request for an immediate controlled shutdown due to a serious risk of personal injury or engine damage.

The operator should contact a workshop before starting the engine again.

Below are some examples of typical faults which cause the red warning lamp to light up:

- Long-term loss of oil pressure.
- Internal EMS software failure.
- Battery voltage too high.
- Severe engine overspeed.
- Serious fuel system fault.

© Scania CV AB 2025, Sweden

Reaction at low reductant level – EU Stage IIIB/IV/US Tier 4i/Tier 4f

Reductant level	Warning lamp	Torque reduction[1]
20%	Constant light	
10%	Flashing	Torque is reduced by 1% per minute to 70 % of the highest torque.
0%	Flashing rapidly	Torque is reduced to 0% (low idling) within 2-10 minutes.

1. Only applies to engines certified according to US Tier 4.

Symbol for low reductant level.

The engine resumes normal torque after reductant has been filled to a level of at least 20%.

© Scania CV AB 2025, Sweden

Reaction at low reductant level – EU Stage V/China IV

Note:

Its behaviour and the symbol depend on the installation of the engine in the machine. The Scania recommendation will lead to the behaviour and symbol described here, but this may differ between different machines.

Symbol for low reductant level.

Level	Warning lamp	Torque and speed control
20%	Constant light	-
10%	Flashes slowly (½ Hz)	Torque is reduced by 1% per minute to 75% of the highest torque.
0%	Flashes rapidly (2 Hz)	Torque is reduced by 1% per minute to 50% of the highest torque. The engine speed is reduced to 60% of the nominal engine speed.

The engine resumes normal torque after reductant has been filled to a level of at least 20%.

© Scania CV AB 2025, Sweden

Reaction to fault in the SCR system – EU Stage IIIB/IV/US Tier 4i/Tier 4f

Time	Warning lamp	Torque reduction[1]
Fault detected	Constant light	
After 30 minutes	Flashing	Torque is reduced by 1% per minute to 70 % of the highest torque.
After 4 hours	Flashing rapidly	Torque is reduced to 0% (low idling) within 2-10 minutes.

1. Only applies to engines certified according to US Tier 4.

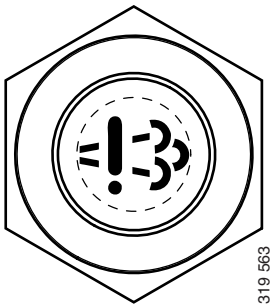

Symbol for fault in SCR system.

If a new fault occurs within 40 hours of operation since the first fault, the warning lamp will come on. After 30 minutes of operation, the warning lamp will flash rapidly and torque will be reduced to 0% (low idling) within 30 minutes.

Once the fault has been remedied and the engine management system has received an indication that the exhaust gas aftertreatment system is operational, i.e. when the fault code has been acknowledged in SDP3, torque returns to the normal level.

IMPORTANT!

If the torque has been reduced to 0% (low idling), the control unit does not detect that the SCR system is functioning again. A service technician must then reset the system so that the torque returns to the normal level.

Note:

The torque reduction only applies to engines certified according to US Tier 4. Some emergency vehicles do not have torque reduction.

© Scania CV AB 2025, Sweden

Reaction to fault in the exhaust gas aftertreatment system – EU Stage V/China IV

Note:

The symbol and behaviour of the warning lamp depend on the installation of the engine in the machine. The Scania recommendation will lead to the behaviour and symbol described here, but this may differ between different machines.

Warning lamp	Torque and speed control
Constant light	None
Flashes slowly (½ Hz)	Torque is reduced by 1% per minute to 75% of the highest torque.
Flashes rapidly (2 Hz)	Torque is reduced by 1% per minute to 50% of the highest torque. The engine speed is reduced to 60% of the nominal engine speed.

Once the fault has been remedied and the engine management system has received an indication that the exhaust gas aftertreatment system is operational, i.e. when the fault code has been acknowledged in SDP3, torque returns to the normal level.

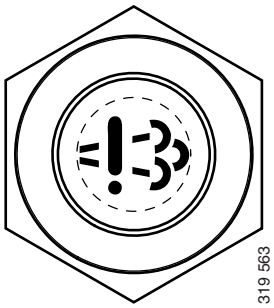

Symbol for faults in the exhaust gas aftertreatment system.

© Scania CV AB 2025, Sweden

Regeneration of the particulate filter

The particulate filter is regenerated, i.e. cleaned, automatically. If a certain amount of soot is accumulated, the engine enters a periodic and automatic program to reduce the amount of soot. The engine can be used without any impact on operation.

However, if the particulate filter becomes full, it must be regenerated manually. The engine cannot be used for approximately 45 minutes while manual regeneration is carried out. The particulate filter symbol is used to indicate that the particulate filter is full and needs to be regenerated manually.

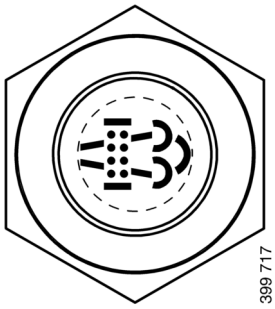

Symbol for the particulate filter.

Note:

During manual regeneration, the engine speed can rise to 1,500 rpm for all-speed engines. For engines configured as single-speed, all regeneration occurs at the selected rotational speed.

WARNING!

The components in the exhaust system may become hot.

Make sure that there is no combustible material near the exhaust pipe.

IMPORTANT!

It is the operator's responsibility to ensure that the machine is in a safe location and safe condition when performing manual regeneration.

Examples of actions include:

- Applying the parking brake.

- Disengaging the generator set.

Note:

The symbol and behaviour of the warning lamp depend on the installation of the engine in the machine. The Scania recommendation will lead to the behaviour and symbol described here, but this may differ between different machines.

© Scania CV AB 2025, Sweden

Warning lamp	Description
Constant light	The particulate filter is starting to become full. Increase the load to improve automatic regeneration or regenerate the particulate filter manually.
Flashes slowly (½ Hz)	Carry out manual regeneration as soon as possible.
Flashes rapidly (2 Hz)	Yellow warning. The particulate filter is overfull (130-160% soot particles). Power is reduced to 70%. Manual regeneration cannot be carried out. Book a mechanic to clean the filter.
Flashes rapidly (2 Hz)	Red warning. More than 160% soot particles. Can no longer regenerate with SDP3, Torque reduction remains as above. Stop the machine and renew the particulate filter.

© Scania CV AB 2025, Sweden

Coolant temperature

IMPORTANT!

An excessive coolant temperature can cause engine damage.

Normal coolant temperature during operation is 90 to 95°C (194 to 203°F).

The alarm levels are set in the engine control unit. The default setting for the lowest and highest limit values for high coolant temperature are 95°C/203°F and 105°C/221°F respectively. The following function is standard as alarm for high coolant temperature:

- Alarm and torque reduction at the lowest limit value.

Depending on the engine configuration, the following alarm functions may also be available:

- Alarm only.
- Alarm and engine shutdown at the highest limit value.
- Alarm, torque reduction at the lowest limit value and engine shutdown at the highest limit value.
- Alarm and engine shutdown at the highest limit value with the possibility of engine shutdown override control.
- Alarm, torque reduction at the lowest limit value and engine shutdown at the highest limit value, with the possibility of engine shutdown override control.

If driven for extended periods under an extremely light load, the engine may have difficulty in maintaining the coolant temperature. At an increased load the coolant temperature rises to the normal value.

Oil pressure

Normal oil pressure during operation is 3-6 bar (43.5-87 psi). The lowest permitted oil pressure when idling is 0.7 bar (10.2 psi).

The engine management system issues an alarm at the following levels:

- At an engine speed below 1,000 rpm and an oil pressure below 0.7 bar (10.2 psi).
- At an engine speed above 1,000 rpm and an oil pressure below 2.5 bar (36.3 psi) for longer than 3 seconds.

The following function is standard as alarm for incorrect oil pressure:

- Alarm and torque reduction by 30%.

Depending on the engine configuration, the following alarm functions may also be available:

- Alarm only.
- Alarm and engine shutdown.
- Alarm and engine shutdown override control.

Note:

High oil pressure (above 6 bar/87 psi) is normal if the engine is cold when started.

Charging indicator lamp

If the lamp comes on during operation: Check and adjust the alternator drive belt according to the instructions in the section Checking the drive belt.

If the charging indicator lamp is still on, this could be due to an alternator fault or a fault in the electrical system.

© Scania CV AB 2025, Sweden

Belt transmission

When the belt transmission is new, it may make a squeaking noise when driving. This noise is normal and disappears after 50-100 hours of operation. The noise does not affect the service life of the belt transmission.

Raised idling speed for engines with an SCR system

If the engine is run without load for an extended period of time, the SCR system needs to be heated by raising the idling speed. The function is called periodic hydrocarbon evaporation and is used to avoid damaging the SCR catalytic converter.

Periodic hydrocarbon evaporation functions differently depending on how the engine is fitted. A warning is output for all engines if the engine needs to be warmed up. The warning is output after approx. 8 hours if the engine is idling without load and the ambient temperature is 20°C (68°F). The time is reduced as the ambient temperature becomes colder.

For some engines, a request for automatic raising of the idling speed is also sent after the warning. If the request is confirmed, the idling speed is raised automatically. The function is active for 45 minutes or less and is deactivated automatically. If the request is not confirmed, the engine is switched off after approx. 45 minutes, if the engine has been configured with engine shutdown.

Note:

During hydrocarbon evaporation, the engine speed can rise to 1,500 rpm for all-speed engines. For engines configured as single-speed, all hydrocarbon evaporation occurs at the selected rotational speed.

© Scania CV AB 2025, Sweden

Engine shutdown

IMPORTANT!

There is risk of post boiling and of damage to the turbocharger if the engine is switched off without cooling. The power must not be switched off before the engine has stopped.

If the engine is fitted with a battery master switch and an SCR system, the SCR system must run for a while after the engine has been switched off to allow it to cool down. During this period the power must not be cut using the battery master switch.

Note:

The battery voltage must remain on for a few seconds after the 15 voltage is switched off so that the control units can store the values and switch to standby mode.

10 prohibited engine shutdowns will cause a torque reduction (70% of fuel volume). Reset the engine by switching it off correctly once.

1. Run the engine without a load for a few minutes if it has been run continuously with a heavy load.
2. Switch off the engine.

Checks after driving

WARNING!

Block the starting device when working on the engine. If the engine starts unexpectedly, there is a serious risk of injury.

There is always a risk of sustaining burns when an engine is hot. Particularly hot parts are branch pipes, turbochargers, oil sumps, and hot coolant and oil in pipes and hoses.

IMPORTANT!

Check the coolant level following the first start. Top up with coolant as necessary.

1. Check that the power supply has been cut.
2. Top up the fuel tank. Make sure that the filler cap and the area round the filler opening are clean to avoid contamination of the fuel.
3. If the engine is fitted with an SCR system: Fill the reductant tank. Make sure that the filler cap and the area round the filler opening are clean to avoid contamination of the reductant.
4. If there is a risk of freezing, the cooling system must contain enough glycol. See the section Risk of freezing.
5. If the temperature is below 0°C (32°F): Prepare for the next start by connecting the engine heater, if any.

© Scania CV AB 2025, Sweden

Transporting engines

IMPORTANT!

When transporting engines or machines, the exhaust outlet must be protected from water and debris. The exhaust gas aftertreatment may be damaged if there is water or debris intrusion.

Ensure that the transport protection is in place and remains there throughout the transport.

© Scania CV AB 2025, Sweden

Maintenance

The maintenance programme covers a number of points that are divided into the following sections:

- Lubrication system
- Air cleaner
- Cooling system
- Fuel system
- Other

WARNING!

Block the starting device when working on the engine. If the engine starts unexpectedly, there is a serious risk of injury.

There is always a risk of sustaining burns when an engine is hot. Particularly hot parts are branch pipes, turbochargers, oil sumps, and hot coolant and oil in pipes and hoses.

The maintenance programme includes the following:

- Maintenance R: One event when taken into service.
- Maintenance S: Minimum basic maintenance.
- Maintenance M: More extensive maintenance.
- Maintenance L: Includes nearly all maintenance items in the form.
- Maintenance XL: Includes all maintenance items in the form.

During a period, the sequence is S-M-S-L-S-M-S-L-S-M-S-XL.

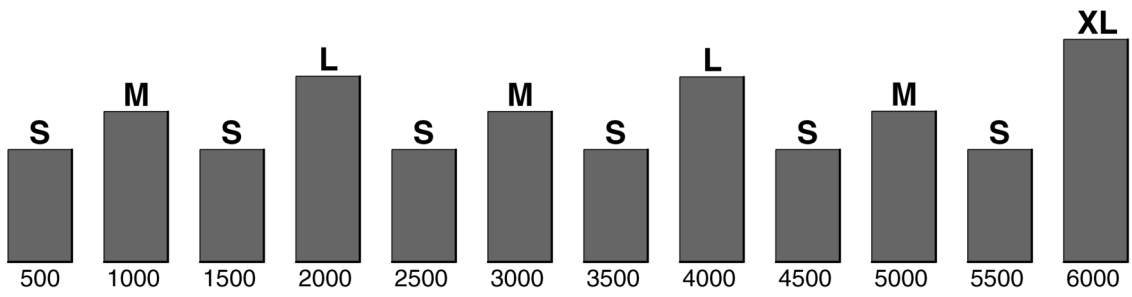

© Scania CV AB 2025, Sweden

IMPORTANT!

On delivery a Scania engine is optimised for its application. However, regular maintenance is necessary to:

- prevent unplanned stops
- extend the service life of the engine
- maximise the long-term emission performance of the engine
- give the best possible operating economy.

© Scania CV AB 2025, Sweden

Cleaning the engine

WARNING!

Beware of hot washing water. Wear eye protection, protective clothes and protective gloves.

Environment

Dispose of the washing water in compliance with relevant national or local regulations.

The engine and engine compartment are cleaned using hot water. Use high-pressure jets with caution. Avoid spraying electrical components such as the starter motor, alternator, etc.

Engines with few hours of operation

IMPORTANT!

On engines with few hours of operation, maintenance must be carried out annually or every 5 years.

Stand-by generator sets and similar items that are not used regularly should be test run and checked in accordance with the manufacturer's instructions.

The following maintenance items must be carried out once the engine has been warmed up to operating temperature.

1. Checking the oil level.
2. Checking the coolant level.
3. Checking the vacuum indicator.
4. Checking the fuel level.
5. Checking for engine leakage.

© Scania CV AB 2025, Sweden

Maintenance intervals

	Daily	First time at		Interval (hours)				Minimum	
		first start	500	500	1,000	2,000	6,000	annu-ally	every 5 years
			R	S	M	L	XL		
Lubrication system									
Checking the oil level	X	X							
Changing the oil[1]			X	X	X	X	X	X	
Renewing/cleaning rotor in centrifugal oil cleaner					X[2]	X[3]	X	X	
Renewing the oil filter			X	X	X	X	X	X	
Air cleaner									
Reading the vacuum indicator	X		X	X	X	X	X		
Renewing the filter element						X	X		X
Renewing the safety cartridge						X	X		X
Cooling system									
Checking the coolant level	X	X	X	X	X	X	X		
Checking the coolant's anti-freeze and corrosion protection		X				X	X	X	
Changing the coolant and cleaning the cooling system							X		X
Fuel system									
Checking the fuel level	X	X							
Renewing the fuel filter					X	X	X		X
Fuel tank venting filter						X		(X)[4]	
Other									
Checking the drive belt		X			X	X	X	X	
Checking for leakage	X			X	X	X	X		
Checking and adjusting the valve clearance			X			X	X		
Renewing the reductant filter						X	X	X	
Cleaning the reductant tank filler filter				X	X	X	X		
Checking and cleaning the reductant tank venting			X	X	X	X	X		
Renewing the plastic filter for reductant tank venting							X		
Checking/renewing the particulate filter	4500[5] hours								

1. For engines that comply with EU Stage 5, see the Oil Change Interval EU Stage 5 table.
2. XPI engines where EU Stage 3/US Tier 3 or lower emission legislation applies.
3. XPI engines where EU Stage 4/US Tier 4 or higher emission legislation applies.
4. Applies every other year.

© Scania CV AB 2025, Sweden

5. The change interval very much depends on the average load and application type. See the section Particulate filter maintenance intervals.

Oil change interval EU Stage V

Table for oil change interval for engines that comply with EU Stage V. For other engines, a 500 hour service interval applies.

Oil	Oil change interval		
	Medium load (l/h)		
	< 25	< 28	> 28
LDF-4	750 h	500 h	500 h
Other	500 h	500 h	400 h

The table does not apply for engines that:

- occasionally have much higher consumption
- have an idling percentage > 15%
- are used at high coolant temperatures

In case of very low surface temperatures: Consult your nearest Scania workshop on how to avoid starting difficulties.

If the engine is used in areas of the world where engine oil with ACEA or API classification is not available, the oil grade must be measured in actual operation. In this case contact the nearest Scania workshop.

© Scania CV AB 2025, Sweden

Particulate filter maintenance intervals

IMPORTANT!

Scania recommends using Scania LDF-4 engine oil. The graph can only be used if this requirement is satisfied.

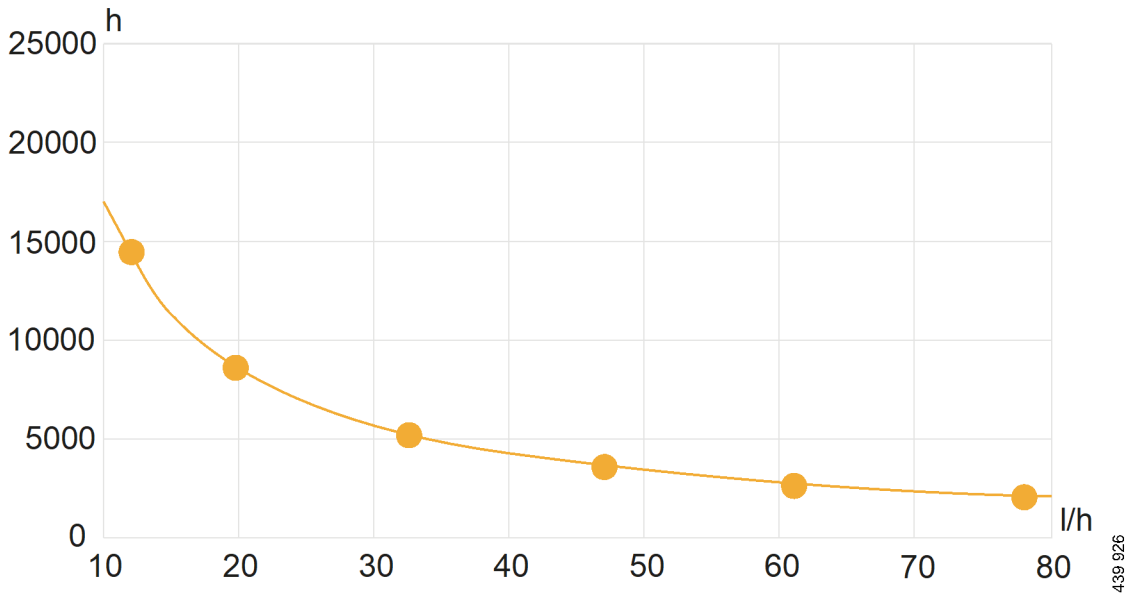

The graphs in the diagram show calculated driving time before particulate filter renewal.

Note:

The Y axis shows the driving time and the X axis shows the average fuel consumption.

© Scania CV AB 2025, Sweden

Lubrication system

Oil grade

Scania LDF stands for the Scania Long Drain Field test standard. Scania LDF oils have been carefully selected after extensive testing. The approval is only granted to the highest grade engine oils available on the market.

Recommended engine oils: Scania LDF and Scania E7 oils.

IMPORTANT!

Regarding particulate filters, the information in this document is not valid if an engine oil other than Scania LDF-4 is used.

Particulate filter	Oil grade
No	LDF-4 LDF-3 LDF-2 LDF Scania Oil E7 ACEA E7 ACEA E5 API CI-4 API CI-4+
Yes	LDF-4 ACEA E6 ACEA E9 API CK-4 with ash content < 1%

For fuels with a high sulphur content, the Total Base Number (TBN) must be at least 12.

© Scania CV AB 2025, Sweden

If Scania LDF-4 is not used, the oil must be of a viscosity class suitable for the outdoor temperature in the area where the engine is used.

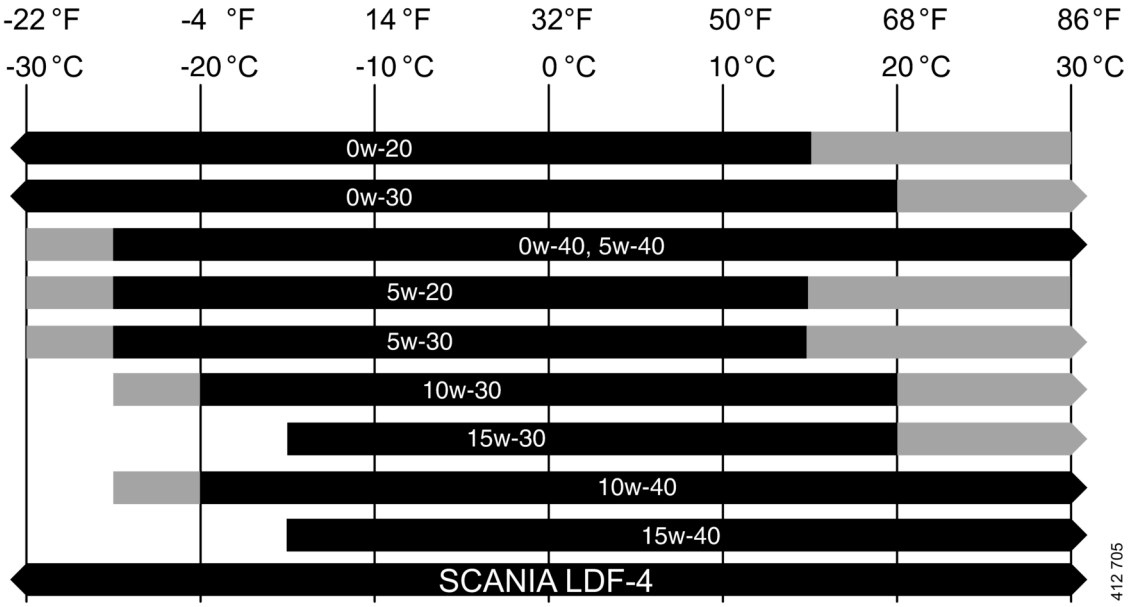

The illustration describes which ambient temperature in °C the viscosity class can handle for Scania-approved and market-approved oil grades. Note that the Scania-approved oil grades have a greater temperature range than market approved oil grades.

352 436 = *The temperature range which the market-approved oil grades, for example ACEA Exx and API Cxx, can handle.*

352 437 = *The temperature range that the Scania-approved oil grades, for example the Scania LDF oils and Scania Low Ash, can handle exceeding that which the market approved oil grades can handle.*

© Scania CV AB 2025, Sweden

Filled engine oil grade label

When changing the oil it is important to use the correct engine oil grade. The oil filler cover must be clearly marked with a label showing the filled oil grade. However, there are only labels for oils from Scania and oil grade ACEA E9.

Stick on a new label if the oil type or oil grade is changed in favour of any of the oil types above. Replace the label if it is missing.

If the oil grades below are used, it is possible to order labels for the oil filler cover from Scania.

Oil filler label in the cylinder block.

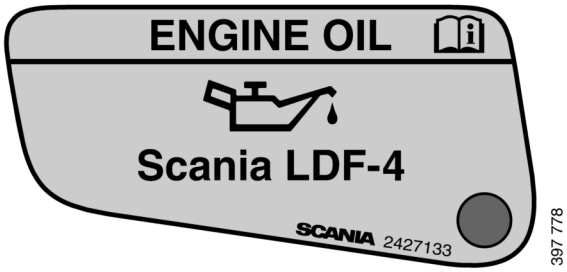

Oil filler label in rocker cover.

Oil grade	Colour	Part no.	Part no.
		Filling in the cylinder block	Filling in the rocker cover
Scania LDF-4	Blue	2 602 886	
Scania LDF-4	Yellow		2 602 885
Scania LDF-3	Red	2 132 426	2 427 133
Scania LDF-2	Blue	2 132 424	-
Scania LDF	Grey	2 269 345	-
ACEA E9	-	2 132 429	

© Scania CV AB 2025, Sweden

Oil analysis

To be able to extend the oil change intervals using an oil analysis, Scania LDF-4 oils must be used.

The following requirements must remain satisfied when the oil is changed:

- Viscosity at 100°C (212°F): max. ± 20% of the original value of the fresh oil.
- TBN (in accordance with ASTM D4739): > 3.5.
- TBN (in accordance with ASTM D4739): > TAN (in accordance with ASTM D664).
- Oil oxidation (in accordance with DIN 51453) > 15.

Such analysis measures the oil's total base number, TBN (Total Base Number), total acidic number, TAN (Total Acid Number), fuel dilution, water content, viscosity and the quantity of particles in the oil.

The result of a series of analyses is used as the basis for establishing a suitable oil change interval.

If the conditions are changed, a new oil analysis programme must be carried out to establish new oil change intervals. Work out the new oil change interval for the engine in conjunction with the workshop.

REQUIREMENT!

Only Scania LDF-4 oils may be used in conjunction with oil analysis and a possible extended oil change interval.

Depending on the market, the warranty conditions may also change if the oil change intervals differ from the recommended Scania timetable.

© Scania CV AB 2025, Sweden

Checking the oil level

REQUIREMENT!

Leave the engine off for at least 7 minutes before you check the oil level.

IMPORTANT!

The oil dipstick is supplied with a protective rubber sleeve that may be damaged in the event of a malfunction. Pull out the oil dipstick by holding the ring designated for this purpose and let the rubber sleeve follow with it without effect.

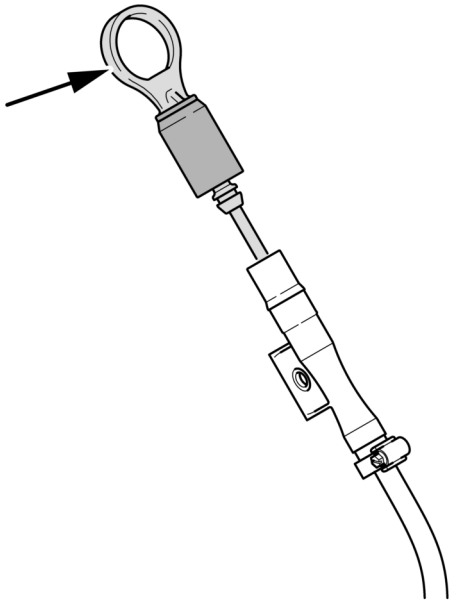

1. Pull out the oil dipstick and check the oil level. The correct level is between the minimum and maximum marks on the oil dipstick.
2. Top up with more oil via the oil filler if the oil level is at or below the minimum mark.

For information on the correct oil grade, see the section Oil grade.

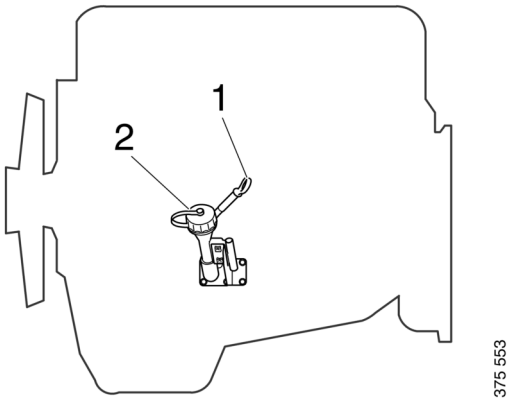

1. *Oil dipstick*
2. *Oil filler*

© Scania CV AB 2025, Sweden

Note:

Some engines are fitted with a protection plug which prevents dust from entering the lubrication system. Make sure that the plug and O-ring are fitted before the oil filler cap.

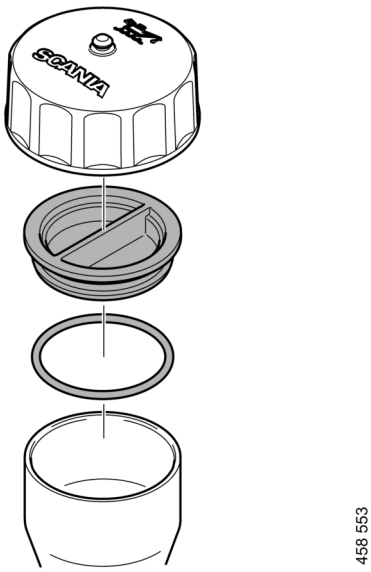

Protection plug with O-ring

Maximum angles of inclination during operation

Maximum permissible angles of inclination during operation vary, depending on the type of oil sump. See illustration.

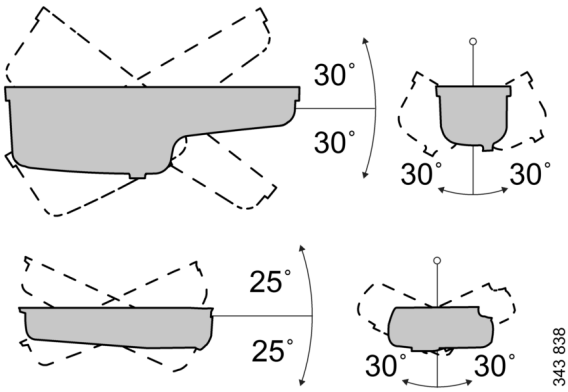

© Scania CV AB 2025, Sweden

Changing the oil

WARNING!

Hot oil can cause burns and skin irritation. Use protective gloves and eye protection when renewing hot oil. Make sure that there is no pressure in the lubrication system before changing the oil. The oil filler cover must always be in place when starting and running the engine to prevent oil being ejected.

Note:

Change oil more often if the engine is subjected to particularly demanding operation, such as a dusty environment, or if deposits in the centrifugal oil cleaner are thicker than 28 mm (1.1 in).

Renew the oil filter and clean the centrifugal oil cleaner when changing the oil.

Environment

Use a suitable container. Used oil must be disposed of as specified in national and international laws and regulations.

1. Unscrew the oil plug and drain the oil when the engine is hot. In certain engine types the oil is pumped out by means of a bilge pump.

   If the engine is drained via the valve, the oil should be hot. Alternatively, use a pump. This is so that draining occurs more quickly.
2. Wipe off the magnet on the oil plug.
3. Renew the gasket on the oil plug.
4. Refit the oil plug.
5. Fill with the amount of oil specified for the oil sump.
6. Wait at least 7 minutes.
7. Check the level on the oil dipstick.

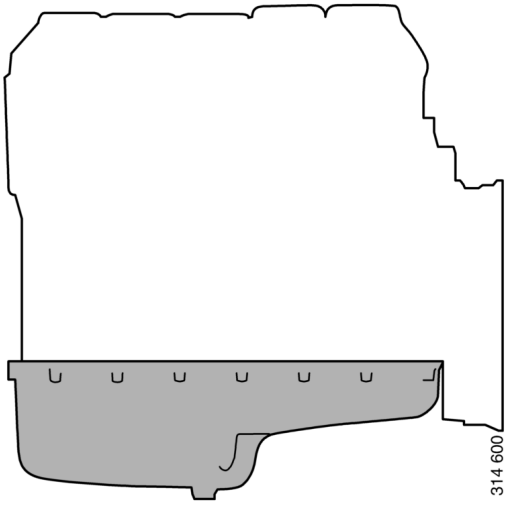

Oil volume for oil sump with deep front:

Min. 31 litres (8.2 US gallons)

Max. 36 litres (9.5 US gallons)

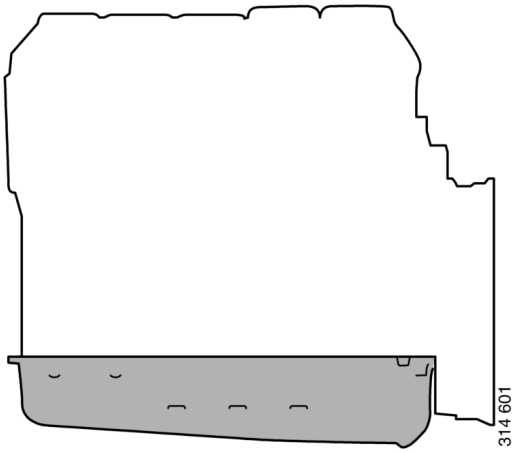

Oil capacity for low oil sump:

Min. 28 litres (7.4 US gallons)

Max. 35 litres (9.2 US gallons)

© Scania CV AB 2025, Sweden

Cleaning upwards-moving centrifugal oil cleaner

WARNING!

The oil may be hot. Carefully remove the cover from the centrifugal oil cleaner.

Wear eye protection and protective gloves when working on the centrifugal oil cleaner.

When the centrifugal oil cleaner is cleaned, there should be some dirt deposits on the paper in the rotor cover. If the paper is clean, the equipment is not working as it should. If this is the case, investigate the cause of this.

Renew the paper more frequently if the dirt deposits are thicker than 28 mm (1.1 inches) during a scheduled oil change.

1. Clean the cover.
2. Unscrew the nut securing the outer cover.
3. If necessary, disconnect the turbo speed sensor connector.
4. Let the oil run out from the rotor.
5. Lift out the rotor. Wipe off the outside.
6. Loosen the rotor nut and unscrew it about 1.5 turns.

Note:

Take care not to damage the rotor shaft.

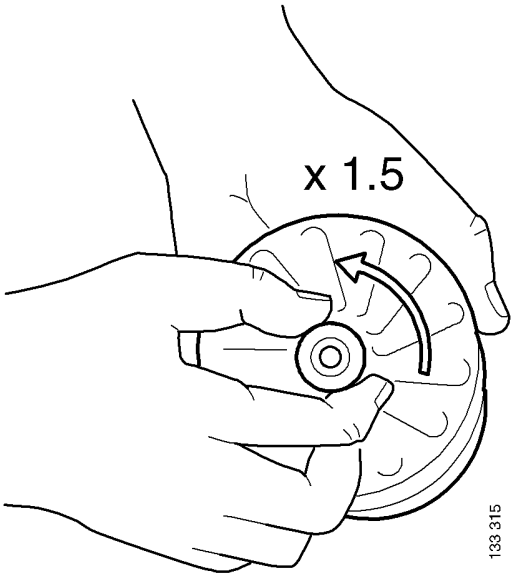

© Scania CV AB 2025, Sweden

7. If the rotor nut is too tight: Turn the rotor upside down and secure the rotor nut in a vice. See illustration.
8. Use protective jaws so as not to damage the grooves of the rotor nut.
9. Turn the rotor 1.5 turns anti-clockwise by hand.
10. If this does not work: Screw 2 nuts together with an M20 screw.
11. Position the screw head at the bottom of the rotor.
12. Position a ring spanner on the lower nut and turn the rotor 1.5 turns anti-clockwise.

IMPORTANT!

Do not attach the rotor directly to the vice. Never strike the rotor cover.

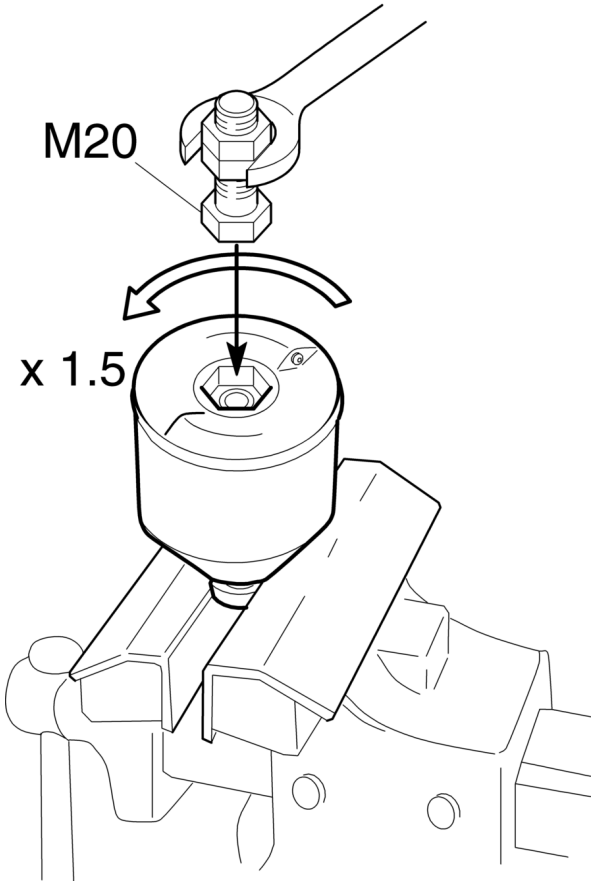

13. Remove the rotor cover by holding the rotor in both hands and tapping the rotor nut against the table. Never strike the rotor directly as this may damage its bearings.
14. Remove the strainer from the rotor cover. If the strainer is stuck, insert a screwdriver between the rotor cover and strainer and carefully prise them apart.

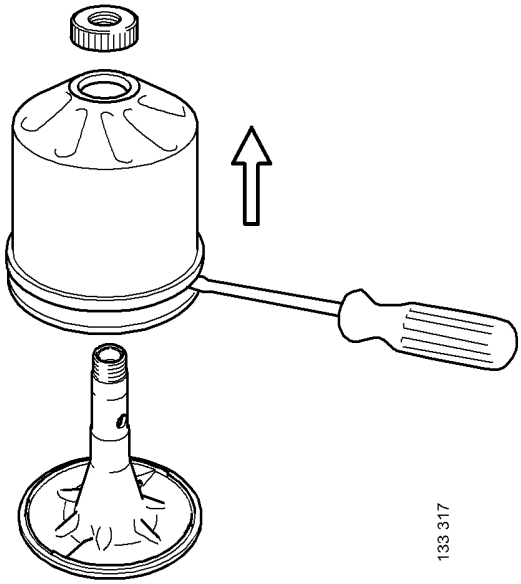

© Scania CV AB 2025, Sweden

15. Remove the paper insert.
16. Scrape off any remaining dirt deposits from the inside of the rotor cover. If the deposits on the paper are thicker than 28 mm (1.1 in), the centrifugal oil cleaner must be cleaned more often.

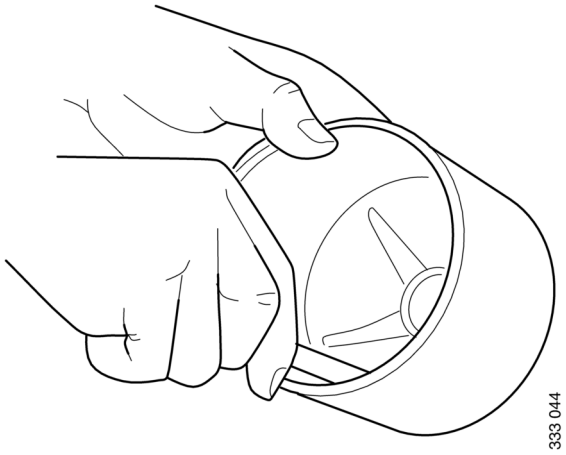

17. Wash the parts according to the applicable industrial method.
18. Check the 2 nozzles on the rotor. Ensure that they are not blocked or damaged.

    Renew any damaged nozzles.
19. Check that the bearings are undamaged.

    Renew damaged bearings.

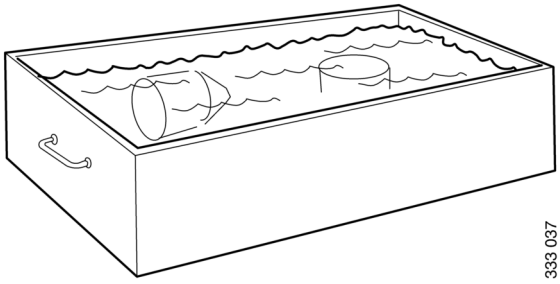

20. Fold and fit a new paper insert on the inside of the rotor cover as illustrated.

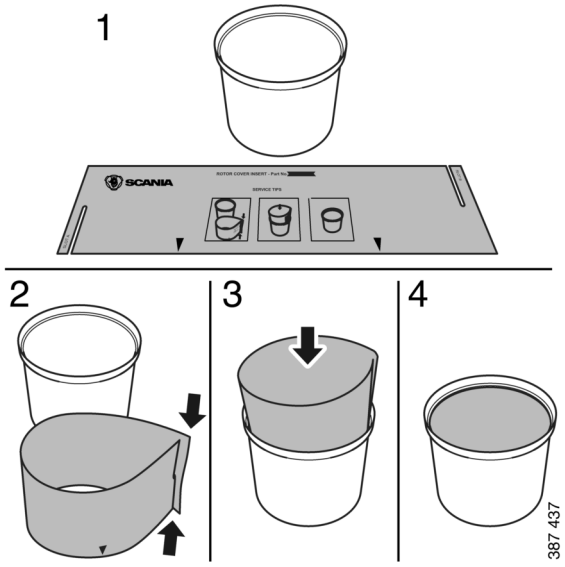

© Scania CV AB 2025, Sweden

21. Fit the strainer onto the rotor.
22. Fit a new O-ring to the foot of the centrifugal oil cleaner.
23. Refit the rotor cover. Ensure that the O-ring is not outside the edges, but is in the groove.
24. Screw the rotor nut back on by hand.
25. Check that the shaft is not damaged or loose.

    Contact a Scania workshop if the rotor shaft needs renewing.

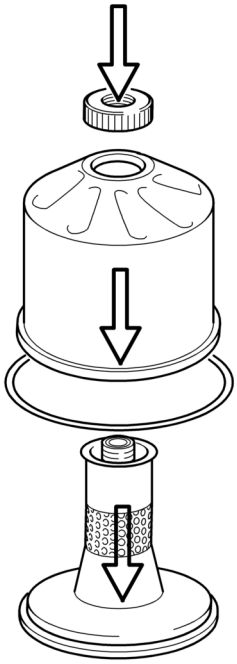

Note:

Take care not to damage the rotor shaft.

26. Refit the rotor and rotate it by hand to make sure it rotates easily.

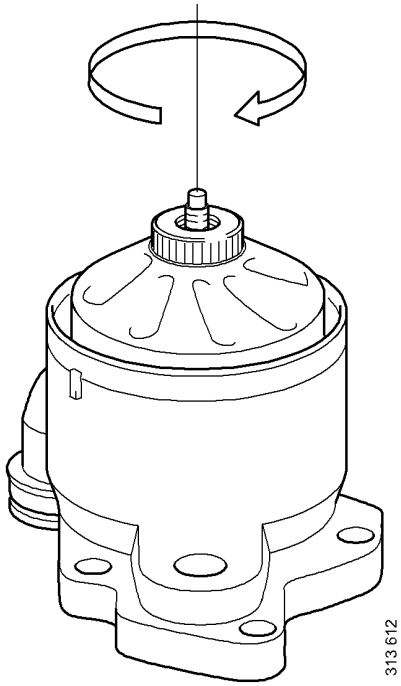

© Scania CV AB 2025, Sweden

27. Fit a new O-ring in the cover.
28. Refit the cover and tighten the lock nut. Tightening torque 20 Nm (15 lb/ft).
29. Reconnect the turbo speed sensor connector.

IMPORTANT!

To reduce the risk of oil leakage it is important to tighten the cover to the correct tightening torque.

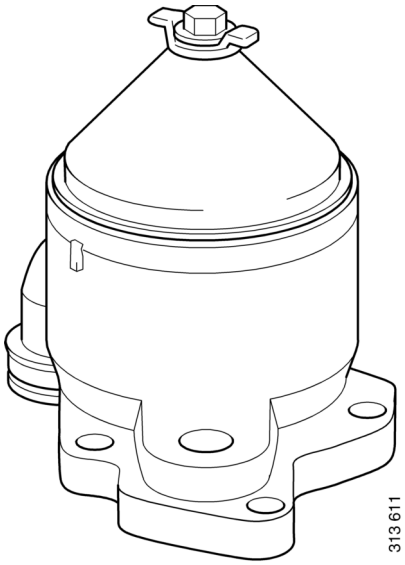

Operational testing of the centrifugal oil cleaner

Operational testing need only be carried out if it is suspected that the centrifugal oil cleaner is malfunctioning. For example, if there are unusually few deposits given the distance driven.

1. Run the engine until it reaches normal operating temperature.
2. Turn off the engine and listen for the sound from the rotor. It should continue rotating for a time, even when the engine has stopped.
3. Use your hand to feel if the filter housing is vibrating.
4. If the filter housing is not vibrating, dismantle and check the centrifugal oil cleaner.

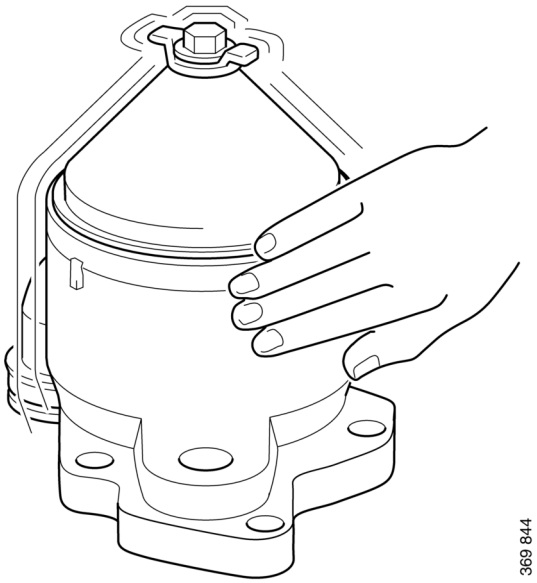

© Scania CV AB 2025, Sweden

Renewing the rotor in downwards-moving centrifugal oil cleaner

Tool

Designation	Figure
Hexagon socket, 1/2", 36 mm	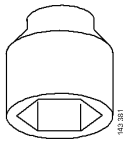

1. Run the engine until it reaches normal operating temperature.
   – **Drain the lubrication system as follows:**
2. Detach the oil filter cover with specified tool. See illustration.
3. Allow the system to drain for approximately 2 minutes.
4. Renew the oil filter.
5. Refit the oil filter cover. Tightening torque for the cover: 25 Nm.
6. Clean the area around the centrifugal oil cleaner.

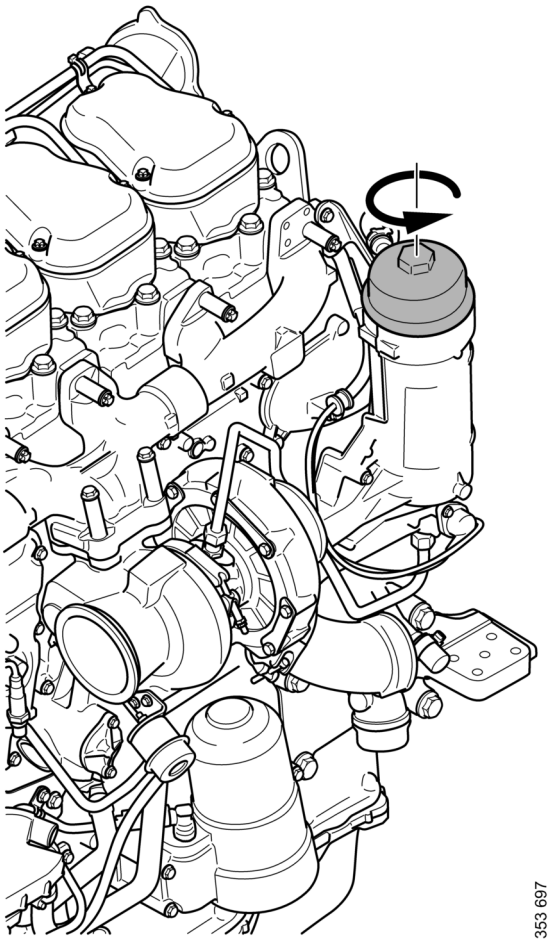

Environment

Use a waste oil trolley when draining the centrifugal oil cleaner.

WARNING!

Wear protective gloves and eye protection. When the bottom cover is detached, a small amount of oil will always run out.

7. Unscrew the bottom cover of the centrifugal oil cleaner 2 turns without removing the cover. See illustration. Start from a mark on the cover to see the number of turns.
8. Drain the centrifugal oil cleaner for approximately 2 minutes.

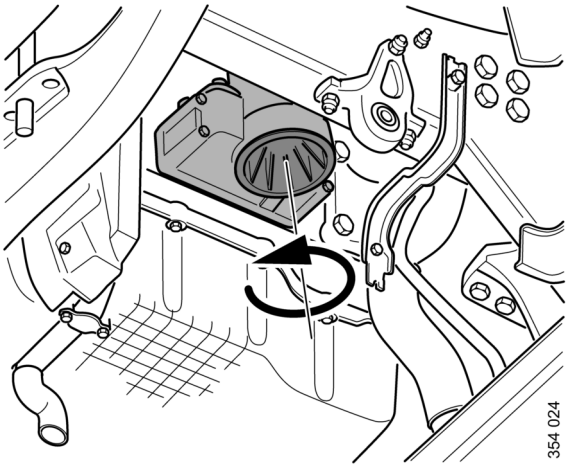

© Scania CV AB 2025, Sweden

9. Remove the bottom cover together with the rotor.

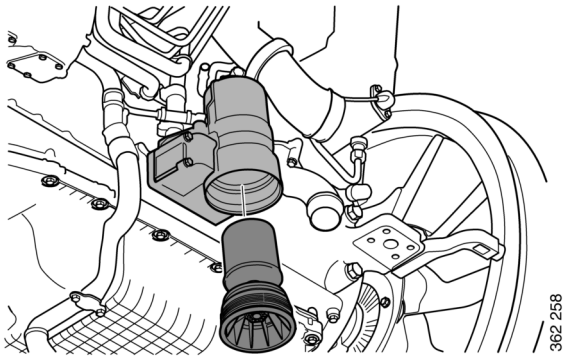

10. Remove the rotor by pulling it straight up from the cover. See illustration.

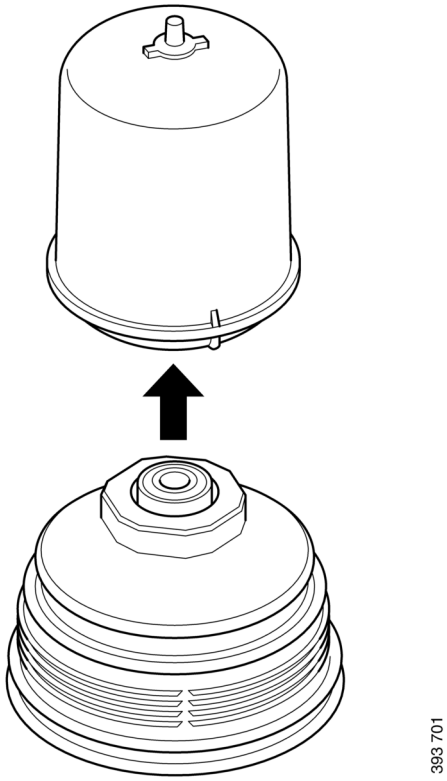

IMPORTANT!

Lubricate the threads on the cover and O-rings with engine oil before they are refitted.

11. Renew the uppermost black O-ring.
12. Renew the 2 lower green O-rings.

© Scania CV AB 2025, Sweden

13. Press the rotor onto the cover.

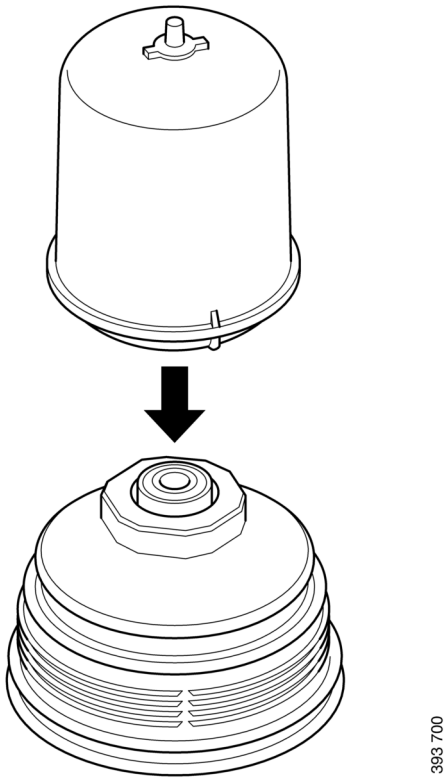

14. Refit the cover with rotor in the centrifugal oil cleaner. Tightening torque: 70 Nm.

© Scania CV AB 2025, Sweden

Renewing the oil filter

Tool

Designation	Figure
Hexagon socket, 1/2", 36 mm	

1. Unscrew the filter cover using the socket.

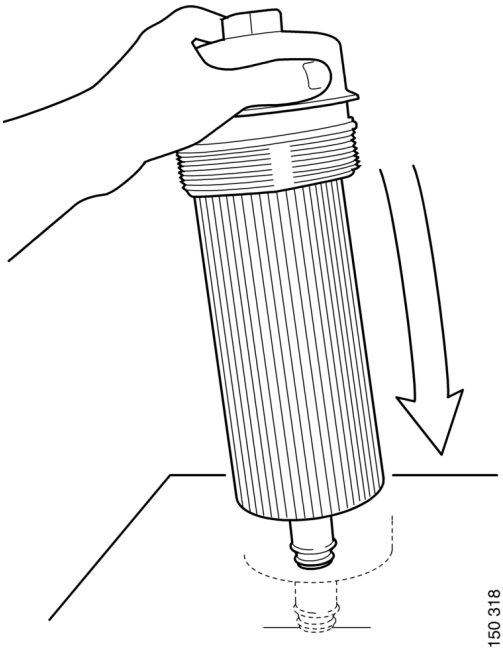

IMPORTANT!

Do not use an adjustable spanner or other open tool, as there is a risk of damaging the filter cover.

2. Lift out the filter housing cover with filter element. The filter housing will drain automatically once the filter has been removed.
3. Detach the old filter from the cover by holding the cover and carefully tapping the entire filter element against something hard. Remember that there will be oil splashes.
4. Fit the new filter and tighten the filter cover to 25 Nm (18 lb/ft).

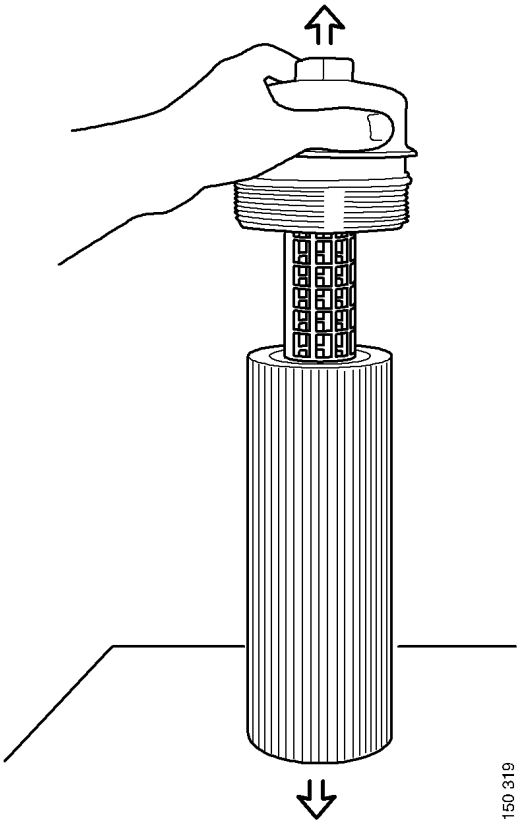

© Scania CV AB 2025, Sweden

Air cleaner

WARNING!

Never start the engine without the air filter in position. Without the air filter, there is a risk of dirt being sucked into the engine.

The engine turbocharger will continue to rotate and take in air for a time, even after the engine has stopped. Therefore, wait for a few minutes before opening the air cleaner.

IMPORTANT!

Renew the filter element before the maintenance interval if the vacuum indicator shows red or emits a signal.

The filter element must not be cleaned in water or be blown clean with compressed air. There is always a risk that the filter element will be damaged when it is cleaned.

Reading the vacuum indicator

Mechanical vacuum indicator

If the mechanical vacuum indicator's red plunger is fully visible, renew the air cleaner filter element in accordance with the following section.

Electric vacuum indicator

The engine may also be fitted with an electric vacuum indicator. It is connected to the machine interface and indicates with a warning lamp or another signal. See the next section for renewing the air cleaner filter element.

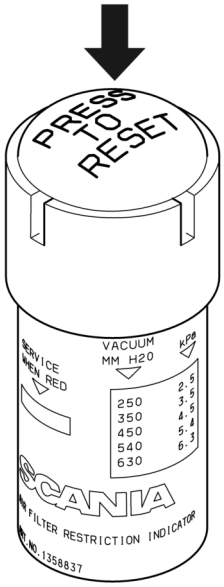

326 671

Mechanical vacuum indicator with reset button.

© Scania CV AB 2025, Sweden

Renewing the air cleaner filter element and safety cartridge

1. Remove the cover from the air cleaner.
2. Renew the filter element.
3. If the air cleaner has a safety cartridge: Remove the safety cartridge and fit a new one.
4. Insert a torch into the filter element and check that the filter paper is free of holes and cracks.
5. Renew the O-ring if it is damaged or hard.
6. Assemble the air cleaner.
7. Ensure that the O-ring is not outside the edges.
8. If the engine is fitted with a mechanical vacuum indicator, reset the vacuum indicator by pressing the button.
9. An electric vacuum indicator is reset automatically after renewing the filter.

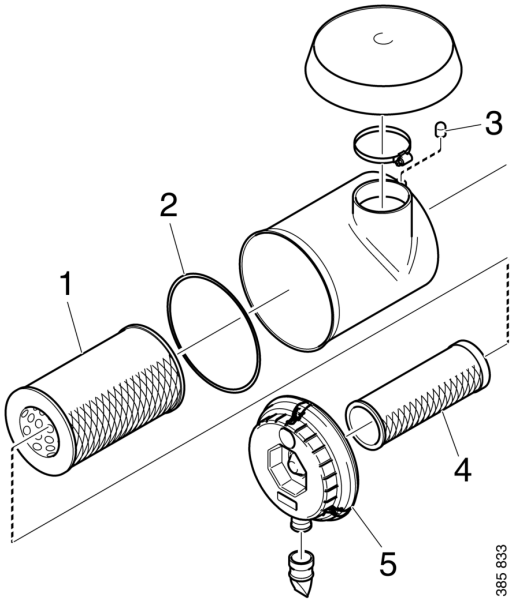

Air cleaner with safety cartridge:

1. *Filter element*
2. *O-ring*
3. *Vacuum indicator*
4. *Safety cartridge*
5. *Cover*

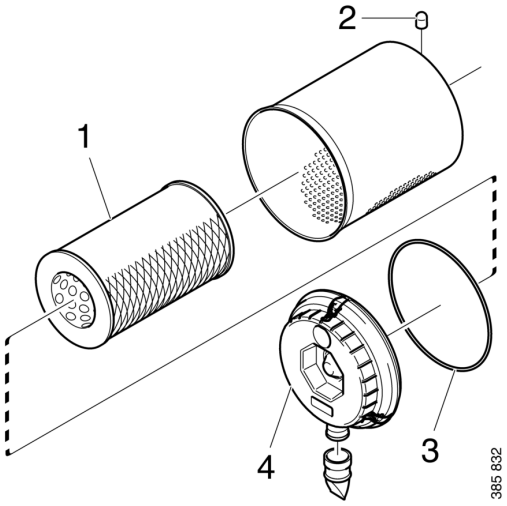

Air cleaner without safety cartridge:

1. *Filter element*
2. *Vacuum indicator*
3. *O-ring*
4. *Cover*

© Scania CV AB 2025, Sweden

Cooling system

Coolant

Only the product Scania coolant, or other products tested as antifreeze and corrosion protection for Scania, may be used in Scania engines.

Products that do not satisfy the requirements for use in a Scania engine may result in faults in and damage to the cooling system. This may lead to the invalidation of Scania's warranty for faults and damage caused by the use of unsuitable coolant.

Note:

The coolant should be changed when the cooling system is cleaned: every 6,000 hours or at least every five years. See Changing the coolant and cleaning the cooling system.

The coolant recommended by Scania is a mixture of water with antifreeze (ethylene glycol) and corrosion protection. The coolant has several properties which are important for the function of the cooling system:

- Corrosion protection
- Antifreeze
- Increases the boiling point

The coolant should always contain 35-55 per cent by volume of antifreeze and corrosion protection so that the coolant properties ensure that the coolant works correctly.

Note:

Too high a dose of antifreeze and corrosion protection will increase the amount of sludge and blockages accumulating in the radiator. Too low a concentration can lead to corrosion of the cooling system and ice formation at low temperatures.

Hot climates

In order to retain the corrosion protection and the higher boiling point, it is essential to use coolant consisting of water mixed with antifreeze and corrosion protection (ethylene glycol). This also applies in countries where the temperature never drops below 0°C (32°F).

Antifreeze and corrosion protection

The antifreeze and corrosion protection used in Scania engines should be of the antifreeze (ethylene glycol) and corrosion protection type.

Scania Ready Mix coolant is a pre-mixed coolant consisting of water, antifreeze (ethylene glycol) and corrosion protection.

Water

Use only pure fresh water that is free from particles, sludge and other impurities. If there is uncertainty about the quality of the water, Scania recommends use of Scania ready-mixed coolants. See the section Recommended Scania products.

Recommended Scania products

Scania Ready Mix 50/50

Part no.	Volume litres	Volume US gallons
1 921 955	5	1.3
1 921 956	20	5.3
1 921 957	210	55
1 896 695	1,000	264

Scania concentrate

Scania also produces coolant with antifreeze and corrosion protection in the form of a concentrate.

Part no.	Volume litres	Volume US gallons
1 894 323	5	1.3
1 894 324	20	5.3
1 894 325	210	55
1 894 326	1,000	264

© Scania CV AB 2025, Sweden

Topping up

Coolant must only be topped up with pre-mixed coolant. The pre-mixed coolant can either be concentrate mixed with clean freshwater or pre-mixed coolant from the factory. Use only pure fresh water that is free from particles, sludge and other impurities.

IMPORTANT!

Containers used for mixing coolant must be intended for the purpose and free from any dirt or contaminants. When the containers not in use they must be kept closed to avoid collecting dirt and dust.

Note:

Within the coolant change interval, coolant may only be reused if it has been cleaned of dirt, sludge and particles. If the coolant is contaminated with oil or fuel, it must not be reused.

Addition of antifreeze and corrosion protection to water

The coolant should contain 35-55% by volume antifreeze (ethylene glycol) and corrosion protection. The percentage varies depending on the need for antifreeze.

A minimum of 35% by volume of Scania antifreeze and corrosion protection is needed to provide sufficient corrosion protection.

Measure the ethylene glycol content (antifreeze and corrosion protection) with a refractometer following the instructions in the Changing the coolant and cleaning the cooling system section.

Risk of freezing

IMPORTANT!

The engine should not be subjected to heavy loads when ice starts to build up in the cooling system.

As the coolant starts to freeze, the water in the coolant starts to crystallise and the percentage of ethylene glycol in the coolant therefore rises. If freezing produces a great increase in the amount of ice, circulation problems could arise. There is no risk of damage by freezing if the content of Scania antifreeze and corrosion protection, or an equivalent mixture of a similar product, is at least 35% by volume.

Minimal ice formation in the coolant sometimes causes disruptions without any risk of damage. For example, the auxiliary heater may not work for up to 1 hour after the engine has been started.

© Scania CV AB 2025, Sweden

Antifreeze and corrosion protection concentration table, litres

Freezing point (°C)	-21	-24	-30	-38	-50	Cooling system volume (litres)
Ethylene glycol (vol. %)	**35**	**40**	**45**	**50**	**60**	
Ethylene glycol (litres)	11	12	14	15	18	30
	14	16	18	20	24	40
	18	20	23	25	30	50
	21	24	27	30	36	60
	25	28	32	35	42	70
	28	32	36	40	48	80
	32	36	41	45	54	90
	35	40	45	50	60	100
	39	44	50	55	66	110
	42	48	54	60	72	120
	46	52	59	65	78	130
	49	56	63	70	84	140
	53	60	68	75	90	150
	56	64	72	80	96	160
	60	68	77	85	102	170
	63	72	81	90	108	180
	67	76	86	95	114	190
	70	80	90	100	120	200

© Scania CV AB 2025, Sweden

Antifreeze and corrosion protection concentration table, US gallons

Freezing point (°F)	-6	-11	-22	-36	-58	Cooling system volume (US gallons)
Volume of ethylene glycol (%)	**35**	**40**	**45**	**50**	**60**	
Volume of ethylene glycol (US gallons)	2.9	3.2	3.7	4	4.8	7.9
	3.7	4.2	4.8	5.3	6.3	10.6
	4.8	5.3	6.1	6.6	7.9	13.2
	5.5	6.3	7.1	7.9	9.5	15.9
	6.6	7.4	8.5	9.2	11.1	18.5
	7.4	8.5	9.5	10.6	12.7	21.1
	8.5	9.5	10.8	11.9	14.3	23.8
	9.2	10.6	11.9	13.2	15.9	26.4
	10.3	11.6	13.2	14.5	17.4	29.1
	11.1	12.7	14.3	15.9	19	31.7
	12.2	13.7	15.6	17.2	20.6	34.3
	12.9	14.8	16.6	18.5	22.2	37
	14	15.9	18	19.8	23.8	39.6
	14.8	16.9	19	21.1	25.4	42.3
	15.9	18	20.3	22.5	26.9	44.9
	16.6	19	21.4	23.8	28.5	47.6
	17.7	20.1	22.7	25.1	30.1	50.2
	18.5	21.1	23.8	26.4	31.7	52.8

© Scania CV AB 2025, Sweden

Checking the coolant level

WARNING!

Do not open the coolant filler cover in the expansion tank if the engine is hot. Hot coolant and steam may spray out and cause burns. If the cover has to be opened do it slowly to release the pressure before removing the cover.

Use protective gloves as coolant can cause irritation if it comes in contact with the skin.

IMPORTANT!

It is not permissible to top up large amounts of coolant via the expansion tank. Filling via the expansion tank leads to air locks in the cooling system which can lead to e.g. cavitation damage to the coolant pump shaft seal. If a large amount of coolant needs to be added, follow the instructions in the section Filling coolant.

Only pour pre-mixed coolant into the cooling system.

The following instructions apply to Scania expansion tanks. For other types of expansion tanks, follow the manufacturer's instructions.

1. Open the expansion tank cover and check the coolant level.
   - The right coolant level on a cold engine is at the height of the lower edge of the filler neck.
   - The right coolant level on a hot engine is approximately 25 mm (1 in) over the lower edge of the filler neck.
2. Top up with coolant as necessary.

© Scania CV AB 2025, Sweden

Checking the coolant's antifreeze and corrosion protection

Tool

Designation	Figure
Refractometer	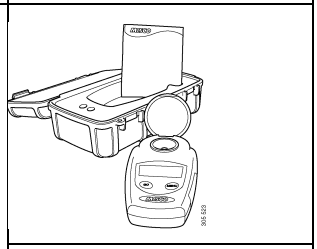
	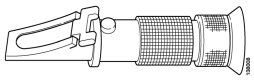

WARNING!

Avoid skin contact with coolant as this may cause irritation to the skin. Wear eye protection and gloves when handling coolant.

IMPORTANT!

Use only pure fresh water that is free from particles, sludge and other impurities.

1. Pour a small amount of coolant into a container and check that the coolant is pure and clear.
2. Change the coolant if it is contaminated or cloudy.
3. Measure the antifreeze and corrosion protection content with the refractometer.

The following rules apply to ethylene glycol-based coolant:

- The antifreeze and corrosion protection content must be a minimum of 35 per cent by volume for corrosion protection to be sufficient.
- An antifreeze and corrosion protection content greater than 55 percent by volume impairs the ability to protect against frost.
- If ice forms in the coolant, there are disruptions initially, but there is no immediate risk of damage. The engine should not be subjected to heavy loads when ice starts to form.

© Scania CV AB 2025, Sweden

Changing the coolant and cleaning the cooling system

Draining coolant

WARNING!

Do not open the coolant filler cover in the expansion tank if the engine is hot. Hot coolant and steam may spray out and cause burns. If the cover has to be opened do it slowly to release the pressure before removing the cover.

Use protective gloves as coolant can cause irritation if it comes in contact with the skin.

Environment

Use a suitable container. Used coolant must be disposed of as specified in national and international laws and regulations.

Draining coolant with coolant pump

Special tools

Number, designation	Figure
2 443 679, coolant pump	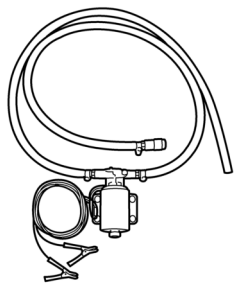 360 625

1. Open the expansion tank cover.
2. Place the hose from the coolant pump in an empty container.

© Scania CV AB 2025, Sweden

3. Connect the pump to the draining nipple in the cylinder block. See illustration.
4. Connect the pump’s 2 cable terminals to the battery’s negative and positive terminal. Make sure that the drainage starts. If draining does not start: Change the position of the cable terminals.
5. Repeat the procedure at the cooling system's lowest drainage point. The location of the lowest drainage point on the engine may differ depending on engine application.

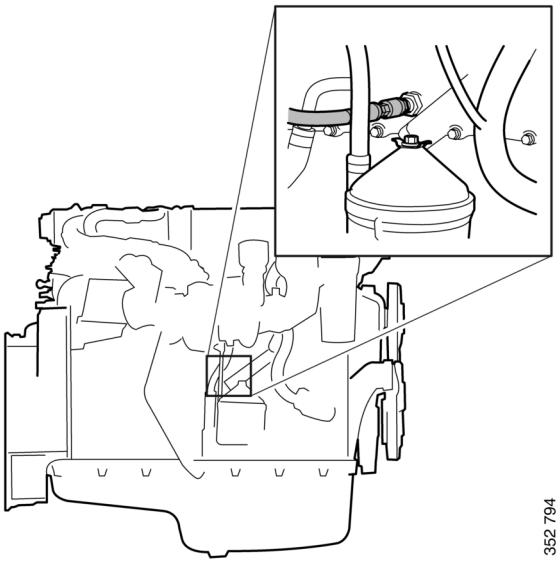

© Scania CV AB 2025, Sweden

Draining coolant with coolant trolley

Tool

Designation	Figure
588 540 Coolant trolley	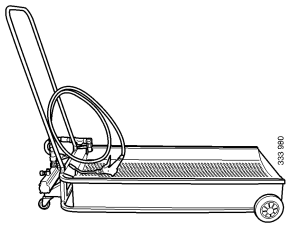
99 301 Adapter	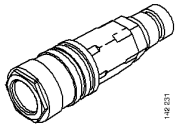

1. Open the expansion tank cover.
2. Position the hose from the coolant trolley in an empty container.
3. Connect the trolley to the draining nipple in the cylinder block. See illustration. An adapter must be used when using a trolley.
4. Drain the coolant.
5. Repeat the procedure at the cooling system's lowest drainage point. The location of the lowest drainage point on the engine may differ depending on engine application.

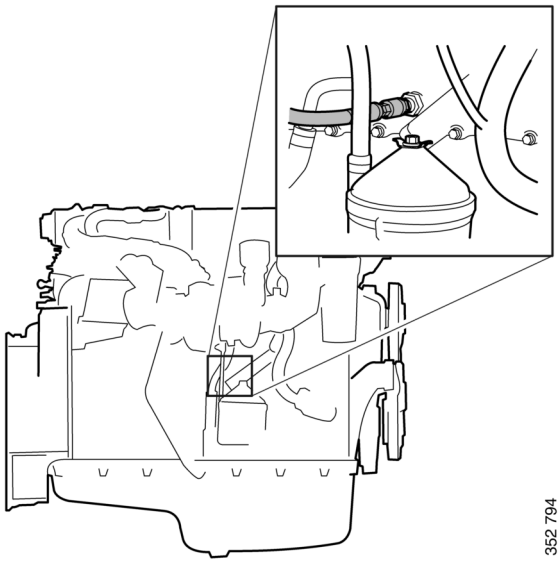

© Scania CV AB 2025, Sweden

Cleaning the cooling system

Note:

Clean the cooling system more often than specified in the maintenance interval if necessary.

External cleaning: Cleaning the radiator and the charge air cooler

IMPORTANT!

Do not use caustic soda or other alkaline detergent as this could damage the aluminium.

Read the warning text on the detergent packaging.

1. Check that the radiator and the charge air cooler are not clogged on the air side and that the discs are not damaged.
2. Carefully scrape away any deposits from the radiator discs. Use a paraffin-based engine cleaner if necessary.
3. Carefully straighten bent discs using a steel brush or similar.

© Scania CV AB 2025, Sweden

Internal cleaning: Removing oil and grease in the cooling system

Environment

Use a suitable container. Used coolant must be disposed of as specified in national and international laws and regulations.

Always fit a new thermostat and a new cover to the expansion tank after cleaning, as the oil in the cooling system destroys the seals. If the engine is fitted with a coolant filter, also renew this filter.

It may be necessary to wash it multiple times if the cooling system is very dirty. One cause of contamination can be that oil is lying on top of the coolant and collecting high up in the cooling system. If several rinses are needed, this is not necessarily because work has been carried out incorrectly. Oil residues often need to be rinsed repeatedly from the expansion tank and the external heating system to be completely clean.

Repeated washing is more effective and preferable to using higher concentrations of detergent (max. 10%) or cleaning for a longer period (max 30 minutes).

If only a small amount of dirt has collected in the expansion tank after cleaning, one extra rinse and clean of the expansion tank only is usually sufficient. There is no need to clean the whole cooling system again.

1. Run the engine until it has reached operating temperature if possible and then drain the cooling system following the previous description.
2. Remove the thermostat.
3. Fill the cooling system with clean hot water mixed with detergent 2 479 017. Detergent 2 479 017 must make up 5-10% (depending on the degree of dirt) of the total coolant volume.

   If detergent 2 479 017 is not available, use a dishwashing detergent for domestic appliances that does not foam. Concentration 1%.
4. Warm up the engine for approximately 20-30 minutes. Remember to switch on the cab heating system, if one is installed.
5. Drain the cooling system.
6. Fill the cooling system with clean, hot water and run the engine for about 20-30 minutes.
7. Repeat steps 3-6 if the cooling system is not clean.
8. Drain the water from the cooling system.
9. If necessary, clean the expansion tank by detaching all hoses and rinsing and cleaning with a degreasing agent and a dish brush.

   Alternatively, dismantle the expansion tank and clean it with water with 10% of detergent 2 479 017. Fill the expansion tank with the mixture, shake it and drain it. Renew the cover of the expansion tank.
10. Fit a new thermostat.
11. Fill the cooling system with new coolant as described in the next section.
12. Check again whether further dirt or oil has collected in the expansion tank. Decide whether it is necessary to carry out another full cleaning or whether only rinsing or cleaning of the expansion tank will suffice.

© Scania CV AB 2025, Sweden

Internal cleaning: Removing deposits in the cooling system

Environment

Use a suitable container. Used coolant must be disposed of as specified in national and international laws and regulations.

1. Run the engine until it has reached operating temperature if possible and then drain the cooling system following the previous description.
2. Remove the thermostats.
3. Fill the cooling system with clean hot water mixed with a radiator detergent that is based on sulfamic acid and contains dispersing agents. Follow the manufacturer's instructions for the concentration and cleaning period.
4. Run the engine for the specified time. Remember to switch on the cab heating system, if one is installed.
5. Drain the cooling system.
6. Fill the cooling system with clean, hot water and run the engine for about 20-30 minutes.
7. Drain the water from the cooling system.
8. Refit the thermostats.
9. Fill the cooling system with new coolant as described in the next section.

Filling coolant

These procedures apply when the cooling system has been drained and needs to be filled with a large amount of coolant.

WARNING!

Use protective gloves as coolant can cause irritation if it comes in contact with the skin. Hot coolant can also cause scalding.

IMPORTANT!

Mix the coolant as specified in the section headed Coolant.

It is not permissible to top up large amounts of coolant via the expansion tank. Filling via the expansion tank leads to air pockets in the cooling system which can lead to e.g. damage to the coolant pump shaft seal. If a large amount of coolant needs to be added, follow the instructions in the section Filling coolant.

Never fill a hot engine with a large amount of cold coolant. There is a high risk of cracks forming in the cylinder block and cylinder heads

Do not start the engine until the correct coolant level has been obtained. If the engine is started with engine coolant level low, it can damage the coolant pump shaft seal, which leads to coolant leakage.

© Scania CV AB 2025, Sweden

Filling coolant with coolant pump

Special tools

Number, designation	Figure
2 443 679, coolant pump	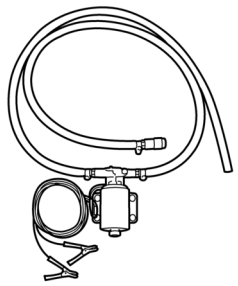 360 625

1. Open the expansion tank cover.
2. Connect the coolant pump to the filler nipple in the cylinder block. See illustration.
3. Connect the pump's 2 cable terminals to the battery's negative and positive terminal. Make sure that the filling starts. If the filling does not start: Change the position of the cable terminals.
4. Start the engine and run it at idling for 15 minutes.

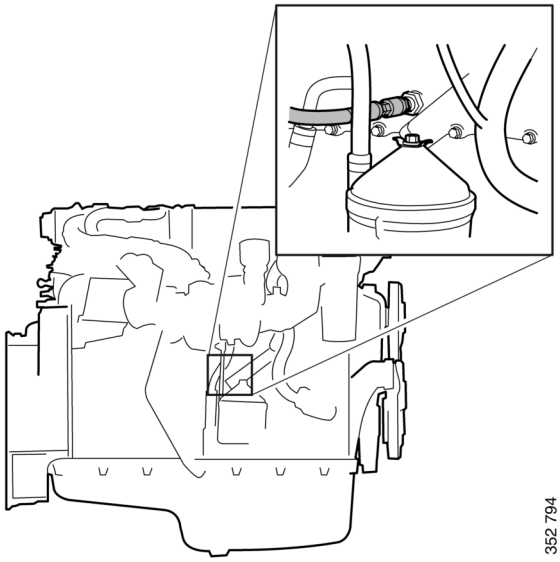

IMPORTANT!

It is very important that the engine is idling. Engine overspeed could damage the coolant pump shaft seal, which leads to coolant leakage.

5. Switch off the engine and fill with coolant to the maximum level through the expansion tank.

Air pockets may still be left in the cooling system. These will disappear after the engine has been operated for a period of time. Therefore, the coolant may need topping up at a later stage.

© Scania CV AB 2025, Sweden

Refilling coolant with coolant trolley

Tool

Designation	Figure
588 540 Coolant trolley	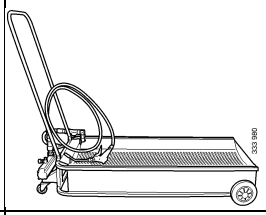
99 301 Adapter	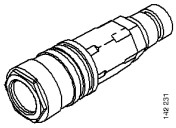

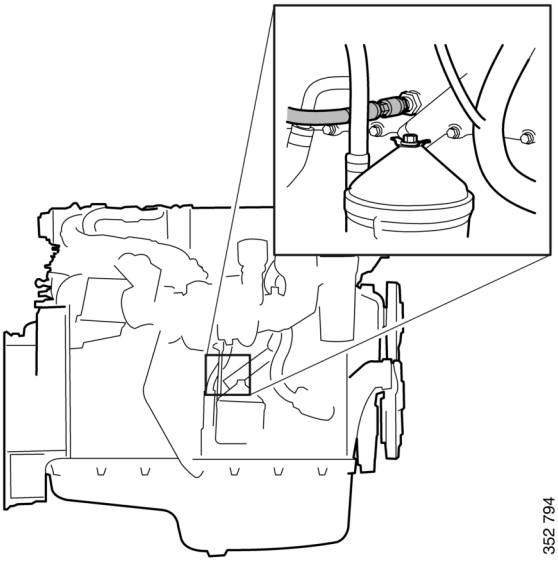

1. Open the expansion tank cover.
2. Connect the coolant trolley to the filler nipple in the cylinder block. See illustration. An adapter must be used when using a trolley.
3. Fill with coolant using coolant trolley to pump up to the maximum level of the expansion tank.
4. Disconnect the coolant trolley.
5. Start the engine and run it at idling for 15 minutes.

IMPORTANT!

It is very important that the engine is idling. Engine overspeed could damage the coolant pump shaft seal, which leads to coolant leakage.

6. Switch off the engine and fill with coolant to the maximum level through the expansion tank.

Air pockets may still be left in the cooling system. These will disappear after the engine has been operated for a period of time. Therefore, the coolant may need topping up at a later stage.

After filling, it may be good to start the engine and check that no coolant leakage occurs.

© Scania CV AB 2025, Sweden

Fuel system

Cleanliness requirements

IMPORTANT!

The whole fuel system is very sensitive to dirt and also very small particles. Foreign particles in the system can cause serious malfunctions. It is therefore very important that everything is as clean as possible when work is carried out on the fuel system. Clean the engine before carrying out repair work. If possible, a hot wash should be used.

It is strictly forbidden to carry out any machining work or work with compressed air near an open fuel system.

Be extra careful and always use clean, lint-free and dust-free clothes and disposable gloves when working on the fuel system. Scania recommends using Tegera 848 gloves.

Clean tools before they are used and do not use any worn or chrome-plated tools. Material and flakes of chrome may come off.

Clean connections and the surrounding area before removal. When cleaning, cloths or paper which shed fibres must not be used. Use clean and lint free cloths, part number 588 879.

Plug or cover the connections during removal. Also clean the connections before the components are fitted. Place removed components on a thoroughly cleaned, dust-free surface. Scania recommends using a stainless steel bench top, part number 2 403 296. Cover the components with a lint free cloth.

Checking the fuel level

Check the fuel level and fill with fuel as necessary.

Note:

If the fuel tank has been run dry or if the engine has not been used for a long time, bleed the fuel system. See the section Venting the fuel system.

© Scania CV AB 2025, Sweden

Renewing the fuel filters

Tool

Designation	Figure
Hexagon socket, 1/2", 36 mm	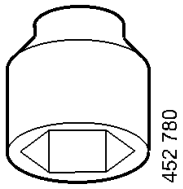

Environment

Use a suitable container. The fuel collected must be disposed of as specified in national and international laws and regulations.

If the fuel tank is positioned higher than the fuel filter housing, the shut-off valve between the fuel tank and the fuel filter housing must be closed. This is to prevent fuel running into the fuel filter housing.

Removing the fuel filters using a draining nipple

On certain engines, there is a draining nipple (1) on the fuel filter housing. If there is no draining nipple, see the following section.

1. Open the draining nipple.

To ensure that the filter housings are drained properly, the filter covers must be removed as follows:

2. On the main filter (B): Make a mark on the cover. Unscrew the cover 3 to 4 turns with a socket.
3. Repeat the procedure with the water separating prefilter (A).

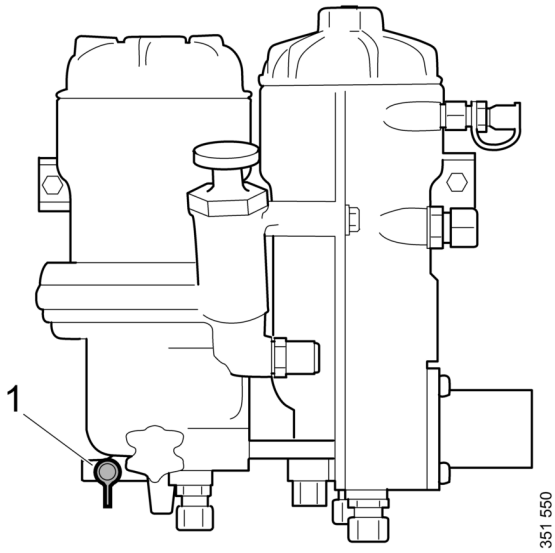

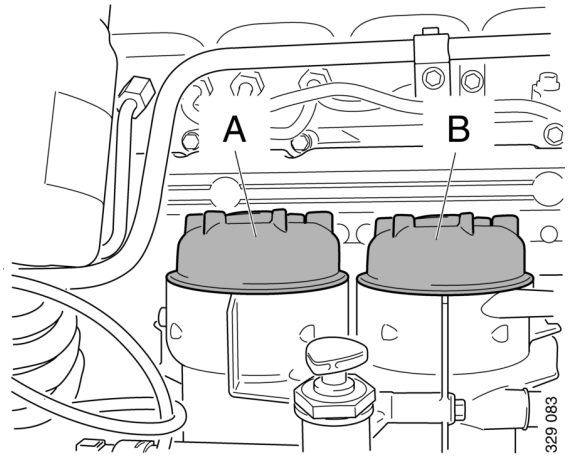

A. Water separating prefilter

B. Main filter

© Scania CV AB 2025, Sweden

4. Wait at least 2 minutes to ensure the filter housings have drained properly.
5. On the main filter: Unscrew and slowly lift the filter cover up with the filter element.
6. On the water separating pre-filter: Unscrew and slowly lift the filter cover up with the filter element.

   The remaining fuel will drain out of fuel filter housing automatically once the filter element has been removed.
7. Check that no fuel or particles remain in the bottom of the filter housings. Draw off remaining fuel and any particles.

IMPORTANT!

It is important to remove remaining fuel and particles from the filter housings to prevent fuel system contamination.

8. Undo the old filter elements from the covers by carefully bending them to one side.
9. Close the draining nipple.

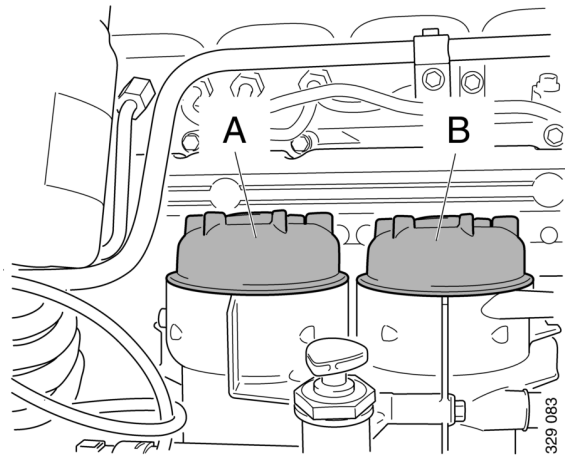

A. Water separating prefilter

B. Main filter

© Scania CV AB 2025, Sweden

Removing the fuel filters using a suction tool

Tool

Designation	Figure
Suction tool	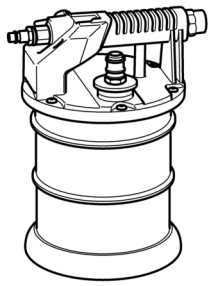 337 297

To ensure that the filter housings are drained properly, the filter covers must be removed as follows:

IMPORTANT!

Start with the water separating prefilter (A). Do not open the main filter cover (B) until the filter housing for the water separating prefilter is completely drained.

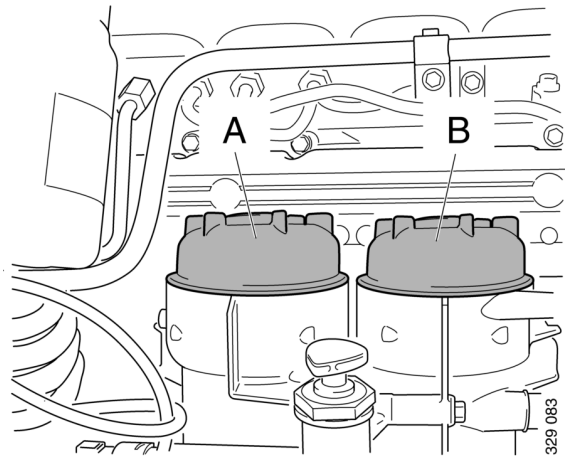

A. Water separating prefilter

B. Main filter

1. Make a mark on the water separating prefilter cover (A). Unscrew the cover 3 to 4 turns with the socket.

IMPORTANT!

Do not use an adjustable spanner or other open tool to remove the filter covers, as the filter covers may then get damaged.

Wait for at least 2 minutes to allow as much of the fuel as possible to drain out of the filter housing.

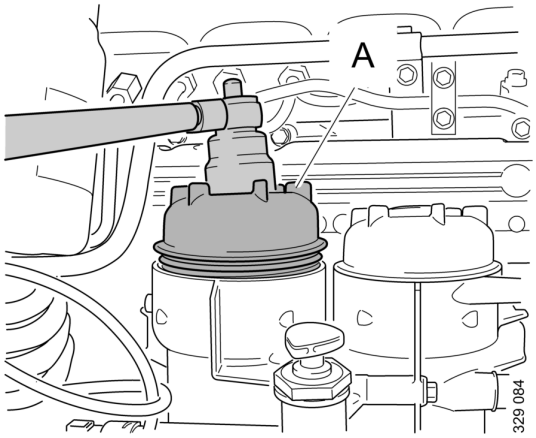

© Scania CV AB 2025, Sweden

2. Unscrew the filter cover (A) and lift it up slowly with the filter element.
3. Make sure the suction tool is completely drained before starting work. Draw out remaining fuel and any particles using the suction tool or a similar tool.
4. Keep the suction tool hose in the filter housing for the water separating prefilter (A).

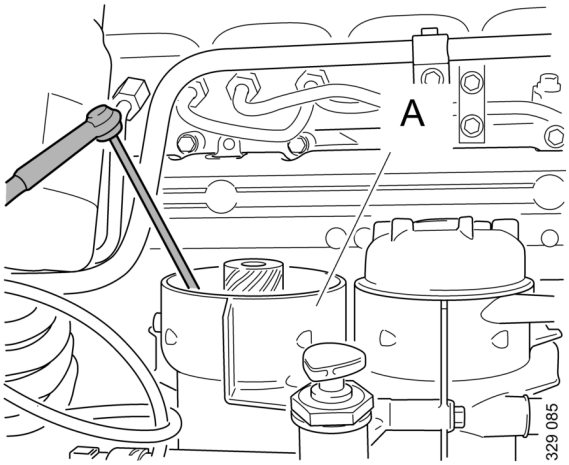

5. Make a mark on the main filter cover (B). Unscrew the cover 3 to 4 turns with the socket. Draw out fuel which may drain into the water separating prefilter housing when the main filter is detached.

IMPORTANT!

Wait for at least 2 minutes to allow as much of the fuel as possible to drain out of the filter housing.

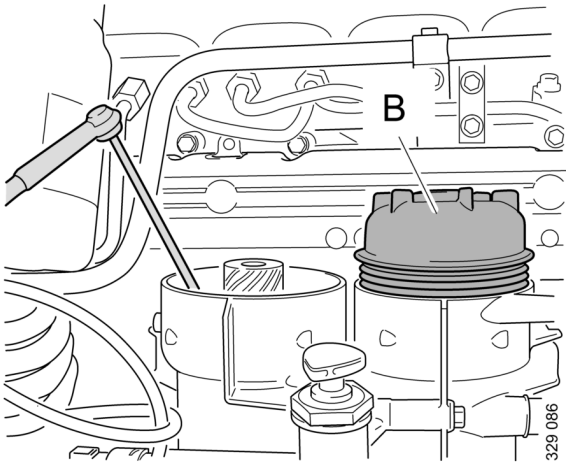

6. Unscrew the main filter cover (B) and lift it up slowly with the filter element.
7. Fuel from the main filter housing (B) will flow into the water separating prefilter housing (A). Leave the suction tool in the water separating suction filter housing until it is completely drained of fuel.

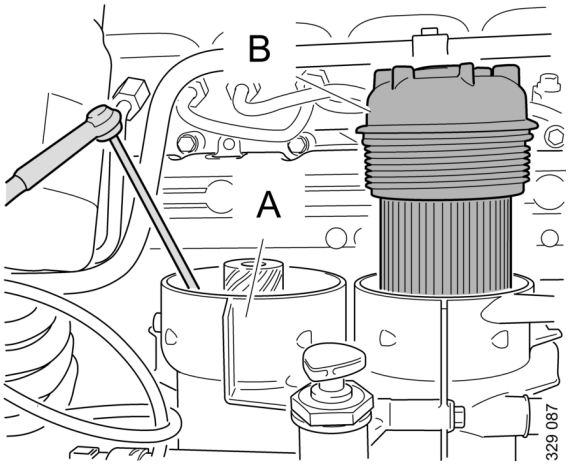

© Scania CV AB 2025, Sweden

8. Move the suction tool to the main filter housing (B). Draw out remaining fuel and particles.

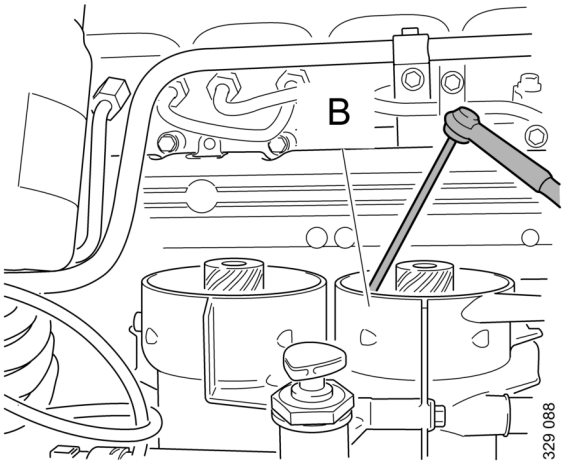

IMPORTANT!

It is important to remove remaining fuel and particles from the filter housings to prevent fuel system contamination.

9. Undo the old filter elements from the covers by carefully bending them to one side.

Fitting the fuel filters

IMPORTANT!

Check that there is no remaining packaging material stuck to the new filter elements. Secure the filter elements in the filter covers before positioning them in the fuel filter housings. Otherwise, the filter elements may break.

In order to prevent back pressure in the filter housings when the filter elements are screwed on, the bleed nipple should be open.

1. Fit a new O-ring on the cover. Lubricate the O-ring with O-ring grease.
2. Press the filter elements into the snap fasteners on the covers.
3. Check that the filter housing is clean before fitting. Use lint free cloths.
4. Press down the filter elements into the fuel filter housings with the filter covers.
5. Screw down the filter covers until the cover seals are in contact with the filter housings. Use the socket.
6. Tighten the filter housings to 25 Nm (18 lb/ft).
7. Bleed the fuel system as per the following section.
8. Start the engine and check that there is no fuel leakage between the filter covers and filter housings. If there is leakage, undo the filter covers and start again from step 4.

© Scania CV AB 2025, Sweden

Venting the fuel system

Venting the fuel system using a suction tool

Tool

Designation	Figure
Suction tool	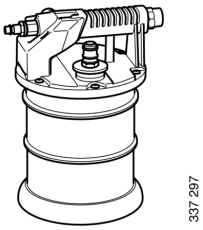 337 297

Note:

Scania recommends venting the fuel system using suction tools rather than with a hand pump. This is a quicker and simpler method, which ensures a complete venting.

Environment

Use a suitable container. The fuel collected must be disposed of as specified in national and international laws and regulations.

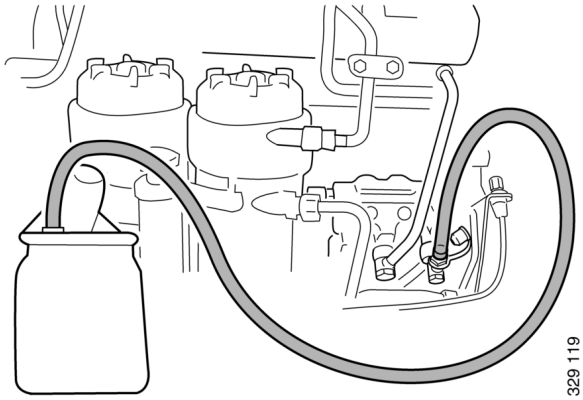

1. Open the bleed nipple on the high pressure pump and connect the suction tool.
2. Hold the suction tool straight and draw out at least a full container of fuel.
3. Once the fuel coming out of the hose is free of air bubbles, then venting is complete.
4. Close the bleed nipple on the high pressure pump. Remove the hose and suction tool.
5. Start the engine and check that there are no leaks.

© Scania CV AB 2025, Sweden

Venting the fuel system using a hand pump

Engine-mounted fuel filter housing

On newer engines, the fuel filter housing is equipped with a continuous venting function. This means that the air that ends up in the system is led back to the fuel tank. However, the fuel system needs to be bled when the tank is run dry or when work is being carried out on the fuel system.

1. Connect a clear plastic hose to the bleed nipple on the fuel filter housing. Let the plastic hose drop into a container that holds at least 5 litres (1.3 US gallons).
2. Unscrew the hand pump handle.
3. Open the bleed nipple on the fuel filter housing and pump until fuel runs out, which will take around 100 pump strokes. Close the bleed nipple.
4. Start the engine and open the bleed nipple carefully. Approximately 3 litres (0.8 US gallons) will run out into the container before the fuel coming out will be free of air.
5. Close the bleed nipple, remove the hose and tighten the hand pump handle.

On older engines, the bleed nipple may be fitted in the fuel filter housing.

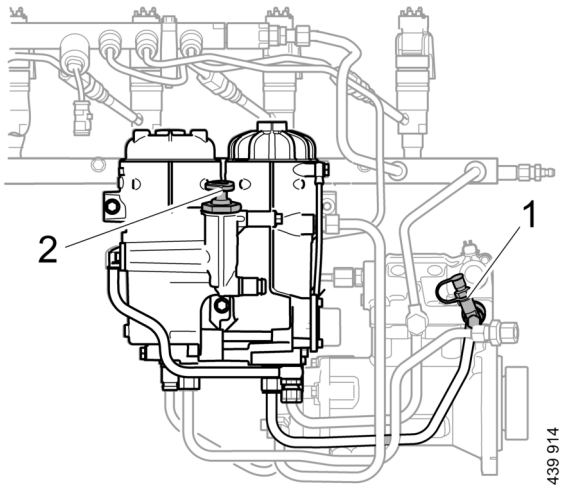

Engines with continuous venting

1. *Bleed nipple*
2. *Hand pump*

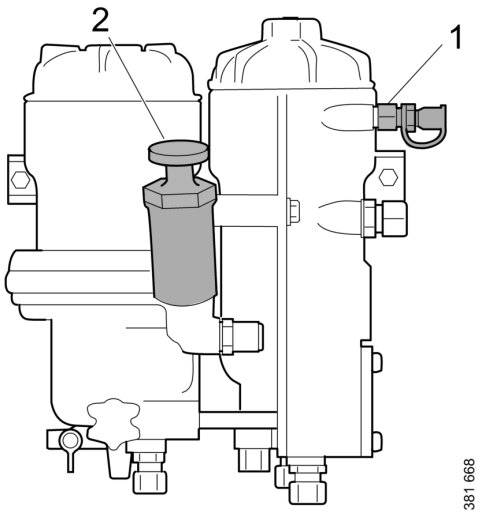

Engines with a bleed nipple in the fuel filter housing

1. *Bleed nipple*
2. *Hand pump*

© Scania CV AB 2025, Sweden

Renewal – Water separating prefilter, spin-on filter

Before starting work, close the drain tap on the fuel pipe and place a container under the filter. Clean the exterior of the filter with a damp cleaning cloth.

Environment

Use a suitable container. The fuel collected must be disposed of as specified in national and international laws and regulations.

1. Disconnect the electrical cable from the contact housing.
2. Open the drain tap and let the fluid run down into the container. Unscrew the bowl.
3. Unscrew the filter from the filter head.
4. Lubricate the O-ring in the bowl with clean engine oil.
5. Screw the bowl onto the new filter by hand. Close the drain tap by hand.
6. Lubricate the O-ring on the filter with clean engine oil and fill the filter with clean fuel.
7. Screw the filter into position until the O-ring rests against the filter head. Tighten the filter another 3/4 turn by hand.
8. Open the shut-off cock on the fuel pipe and check that the fuel system is sealed.
9. Connect the electrical cable to the contact housing.
10. Bleed the fuel system.

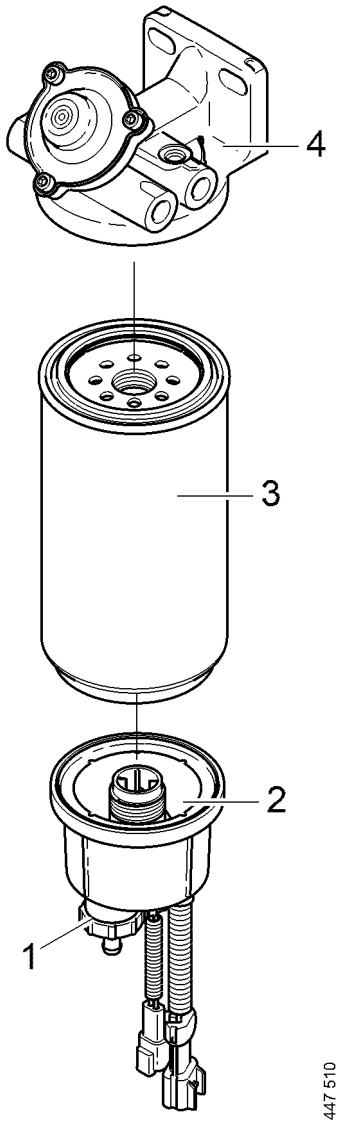

1. Drain tap.

2. O-ring in bowl.

3. Fuel filter.

4. Filter head.

© Scania CV AB 2025, Sweden

Renewal – Water separating main filter, spin-on filter

Environment

Use a suitable container. The fuel collected must be disposed of as specified in national and international laws and regulations.

1. Clean the outside of the filter (1) with a damp cleaning cloth.
2. Unscrew the filter (1).
3. Use clean engine oil to lubricate the gasket on the new filter.
4. Screw the new filter (1) into place by hand until contact is achieved.
5. Then screw a further 3/4 turn by hand.
6. Bleed the fuel system.

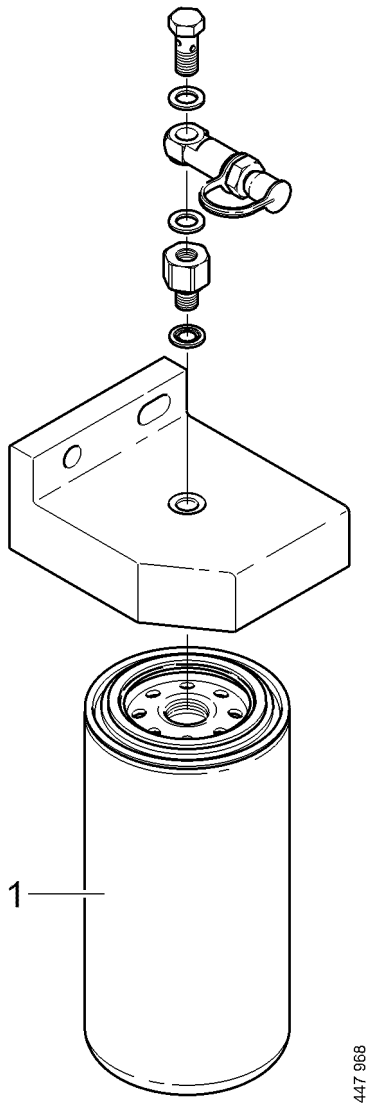

© Scania CV AB 2025, Sweden

Renewing the fuel tank venting filter

1. Remove the hose from the filter and then remove the filter.
2. Clean around the tank pick-up unit and along the rubber hose.
3.
4. Clean the surface where the filter is to be fitted.
   - Use water and detergent for coarse dirt.
   - Use a degreasing agent for grease and oil.
   - Use chemically clean petrol for adhesive residue.
5. Adjust the tank ventilation connection to the correct position.
6. Wait so that the detergent has time to evaporate before the filter is fitted.
7. Fit the filter to the hose.
8. Remove the protective tape from the fuel filter. Push the filter vertically into position by hand and maintain the pressure for at least 5 seconds.
9. Refit the hose.

Note:

The ventilation filter must be positioned vertically in order to function correctly. Ensure that there are no kinks in the hose or any chafing or over-extension. The ideal fitting temperature of the component parts is 21°C-38°C.

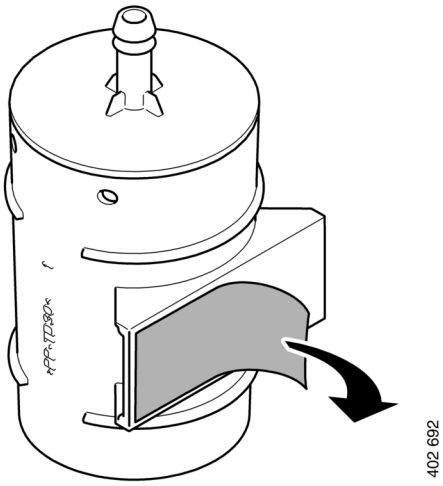

Protective tape on venting filter.

© Scania CV AB 2025, Sweden

Other

Checking the drive belt

IMPORTANT!

Before starting, make a note of how the drive belt is fitted. Refit the drive belt with the same direction of rotation as it had before removal.

1. Check the drive belt thoroughly, particularly at the idler rollers.
2. Check the drive belt for cracks. Renew the drive belt if deep cracks have formed.

Note:

Small and shallow cracks are normal and form after only a few hours of operation. They do not mean that the drive belt needs to be renewed. If there are many deep cracks, or if parts of the drive belt have started to come off, the drive belt must then be renewed.

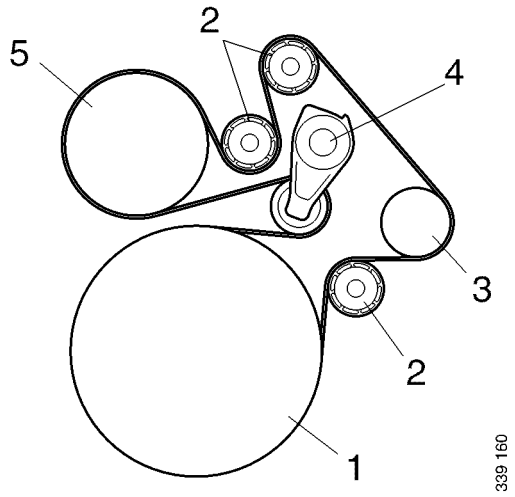

Example of a drive belt:

1. Crankshaft

2. Idler roller

3. Alternator

4. Belt tensioner

5. Coolant pump

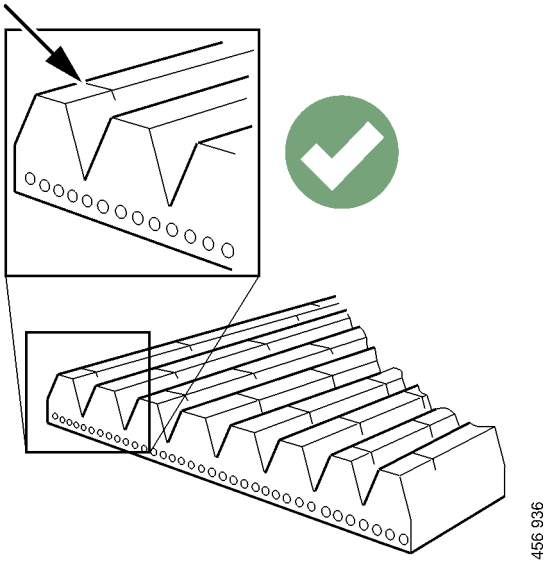

Example of a minor crack in the drive belt. The drive belt can be refitted.

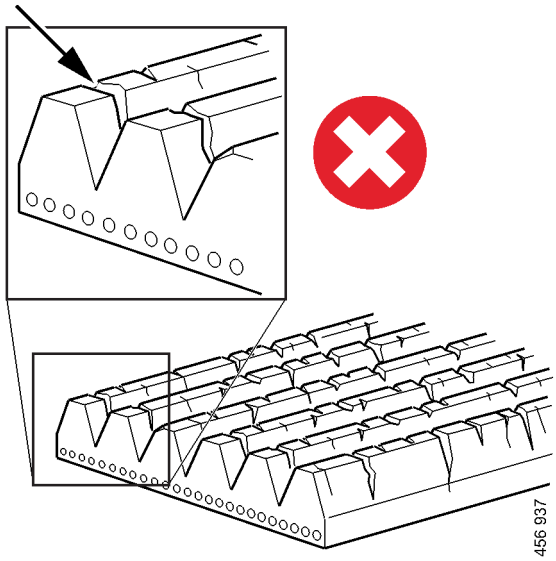

The drive belt has deep cracks and must be renewed.

© Scania CV AB 2025, Sweden

3. Check drive belt wear. Renew the drive belt if it is too worn.

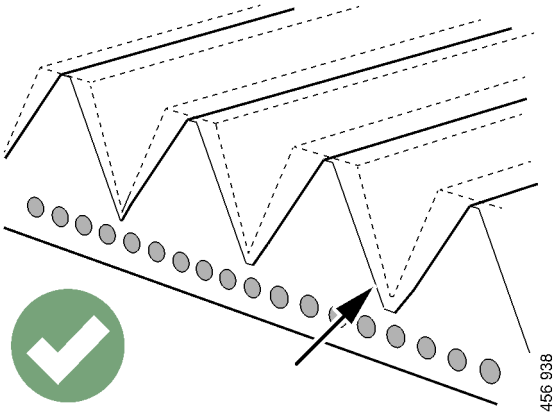

The drive belt is starting to become worn, but can be refitted.

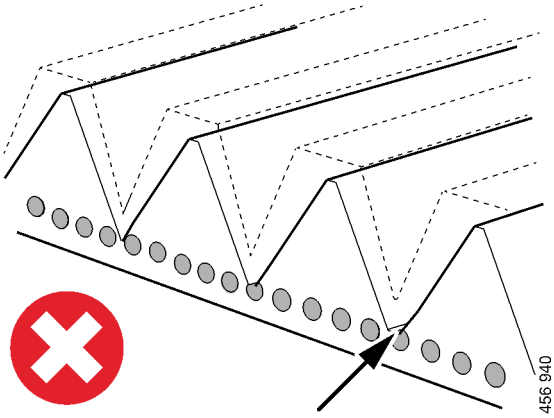

The belt is worn down to the cord. The drive belt must be renewed.

© Scania CV AB 2025, Sweden

Checking for leakage

IMPORTANT!

If serious leakage occurs, contact your nearest workshop.

1. Start the motor.
2. Check for oil, coolant, fuel, air or exhaust leakage.
3. Tighten or renew leaking connections. Check the overflow holes which show whether the O-rings between the cylinder liners and crankcase are leaking.
4. Check whether the drain hole on the coolant pump is blocked. If there is leakage, renew the seal in the pump or the complete coolant pump assembly.

© Scania CV AB 2025, Sweden

Checking and adjusting the valve clearance

Special tools

Number	Designation	Figure
99 309	Turning tool for rotating the flywheel from below	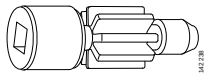
2 402 509	Turning tool for rotating the flywheel from above	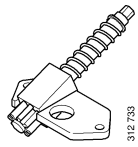

Other tools
Torque wrench, 0-50 Nm
Waterproof felt-tip pen
0.45 and 0.70 mm feeler gauges
Flash light
Mirror

WARNING!

Block the starting device. If the engine starts unexpectedly, there is a serious risk of injury.

IMPORTANT!

The engine must be cold when the work is carried out.

Remember to remove the turning tool from the flywheel following adjustment.

Note:

Carry out the working without pausing, so that no step is overlooked.

Carry out a check and adjustment of the valve clearances one more time after the first 500 hours of operation. After this, adjustment according to the regular interval takes place, which is every 2,000 operational hours.

© Scania CV AB 2025, Sweden

The reference information UP TDC,DOWN TDC and the angle indications listed in the table below are engraved on the flywheel. Depending on the engine installation, this information is visible in one of the windows, either furthest up or furthest down on the flywheel. See illustration.

Valve clearance, specifications	
Intake valve	0.45 mm (0.018 in)
Exhaust valve	0.70 mm (0.028 in)

Tightening torque	
Lock nut for valves	35 Nm (26 lb/ft)

Adjust the valves according to the table below. Follow the respective column depending on whether you are reading the engraving on the flywheel in the lower or the upper window. Start adjustment at the top of the table.

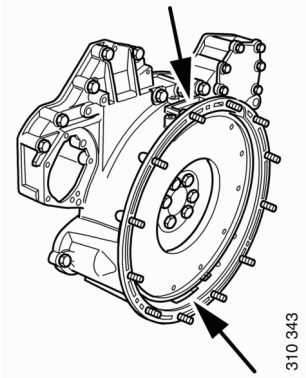

Upper and lower window to read the engraving on the flywheel.

Reading in the lower window	Rotation	Valve transition on cylinder	Adjust valves on cylinder	Reading in the upper window
DOWN TDC	1		1	UP TDC
72/432	1	5		252/612
144/504	1		2	324/684
216/576	1	3		36/396
288/648	1		4	108/468
DOWN TDC	2	1		UP TDC
72/432	2		5	252/612
144/504	2	2		324/684
216/576	2		3	36/396
288/648	2	4		108/468

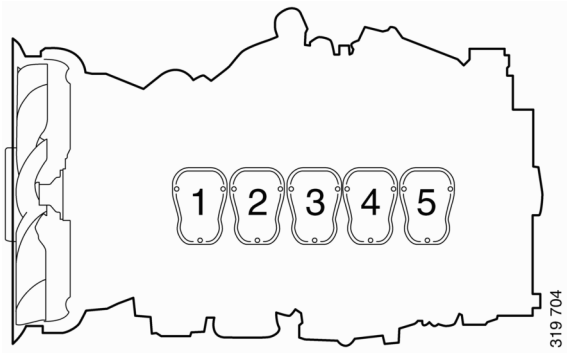

Order of cylinders.

© Scania CV AB 2025, Sweden

1. Clean the rocker covers and the area around them.
2. Remove the rocker covers.
3. Use the turning tool appropriate to the installation of the engine. Tool 99 309 is used to rotate the flywheel from the underside of the engine and tool 2 402 509 is used from the top side.
4. Start adjusting one cylinder according to the table. Rotate the flywheel until the correct engraving can be read on the flywheel. It may be necessary to rotate it more than 1 revolution.

   Rotate the flywheel in the rotational direction of the engine, which is clockwise viewed from the front of the engine and anticlockwise viewed from the back of the engine.

   During a valve transition, the exhaust valve (the long arm) is closing at the same time as the intake valve is opening.

   The UP TDC engraving on the flywheel is now visible in the window furthest up on the flywheel. The DOWN TDC engraving is visible in the lower window.
5. Read the table on the previous page to see which valve to adjust.
6. Stick the feeler gauge under the pressure pad of the rocker arm and check the valve clearance.
7. If necessary, adjust the valve clearance by
   a) loosening the lock nut on the end of the rocker arm
   b) adjusting the valve clearance with the adjusting screw
   c) tighten the lock nut.
8. Mark the rocker arm with the felt-tip pen and then continue with the next cylinder according to the table.

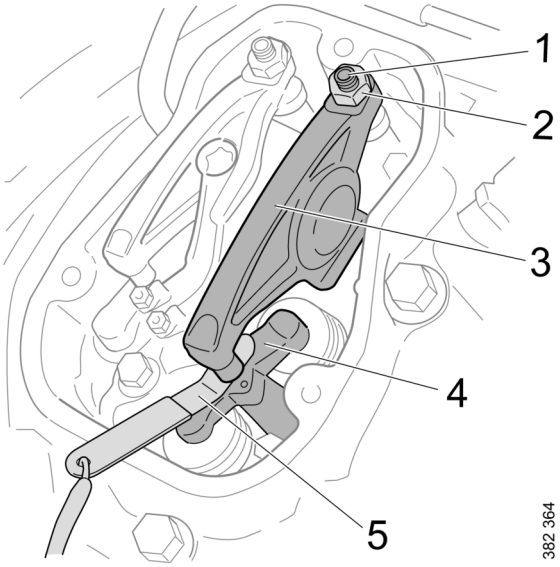

1. *Adjusting screw*
2. *Lock nut*
3. *Rocker arm*
4. *Valve bridge*
5. *Feeler gauge*

© Scania CV AB 2025, Sweden

Renewing the reductant filter

1. Wipe clean around the filter housing to prevent impurities from penetrating it.
2. Remove the filter housing. Use a 46 mm socket.

WARNING!

There may be a lot of reductant in the filter housing and it may spill out. Wear protective gloves.

IMPORTANT!

Always rinse away reductant spillage on connections and other parts with lukewarm water to prevent corrosion. If reductant seeps into electrical connections or electrical cables, these must be renewed.

3. Remove the sealing diaphragm.

4. Remove the old reductant filter and fit a new one.

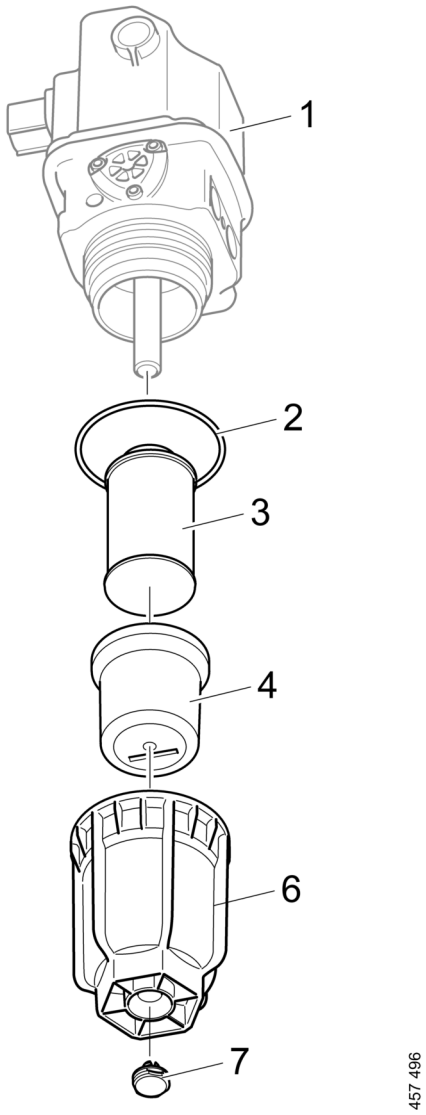

1. *Pump*
2. *O-ring*
3. *Filter*
4. *Sealing diaphragm*
5. *Anti-freeze (not illustrated)*
6. *Filter housing*
7. *Ventilation cap*

© Scania CV AB 2025, Sweden

5. If the frost protection device in the filter housing comes loose, wipe both the frost protection device and filter housing thoroughly so that they are completely dry before they are assembled again.

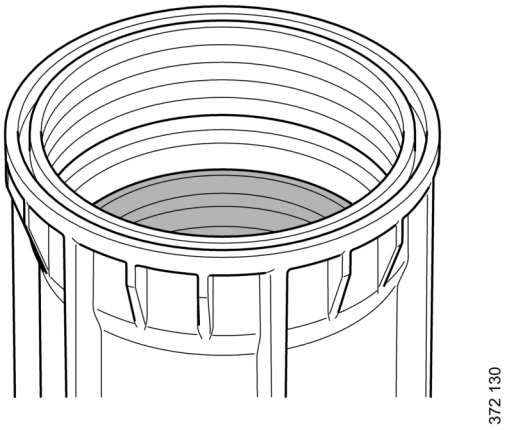

6. Wipe the sealing diaphragm and fit it over the filter.

   Ensure that the edge of the diaphragm is sitting in the groove.

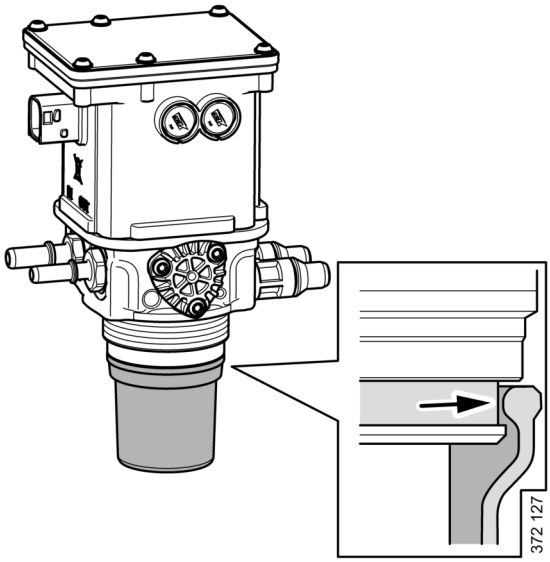

7. Lubricate the sealing diaphragm and threads with the accompanying spray.

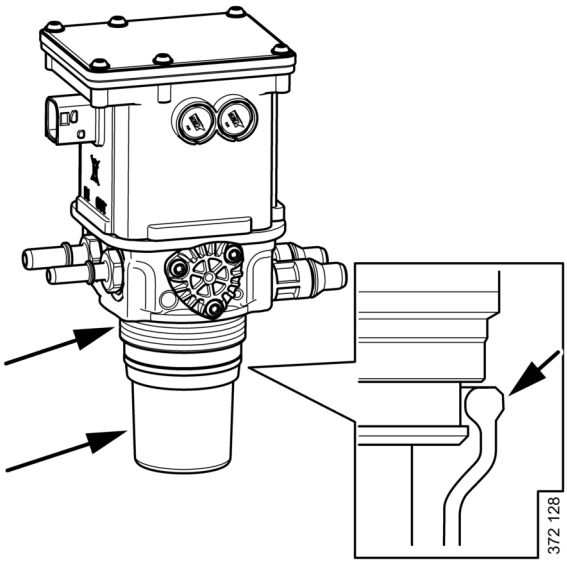

© Scania CV AB 2025, Sweden

8. Renew the O-ring. Place the new O-ring in the filter housing.

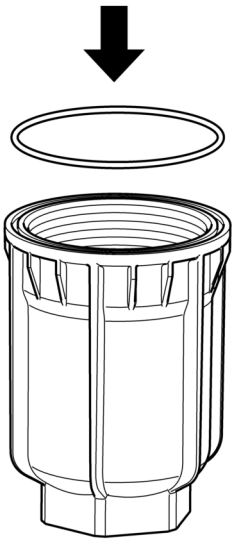

372 129

9. Refit the filter housing. Use a 46 mm socket. Tighten to 80 Nm (59 lb-ft).

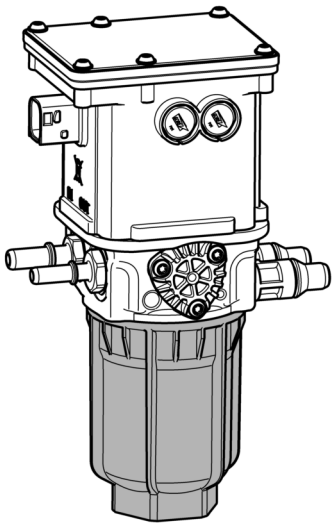

372 125

© Scania CV AB 2025, Sweden

Cleaning the reductant tank filler filter

Make sure that the filler filter (1) is clean. If it is dirty: Clean the filler filter with clean water and refit it.

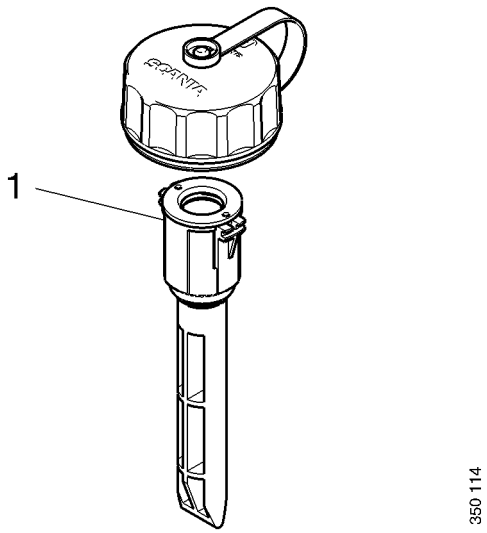

Checking venting functionality

1. Open the tank filler cover.
2. Remove the ventilation filter (2).
3. Blow air into the hose (3) and check that air passes along the hose and comes out through the filler. If not: Detach the bleed hose and check it and examine the vent opening in the tank. Clean with clean water if necessary.
4. Refit the filler cover.
5. Blow the filter clean; clean it with clean water.
6. Refit the filter.

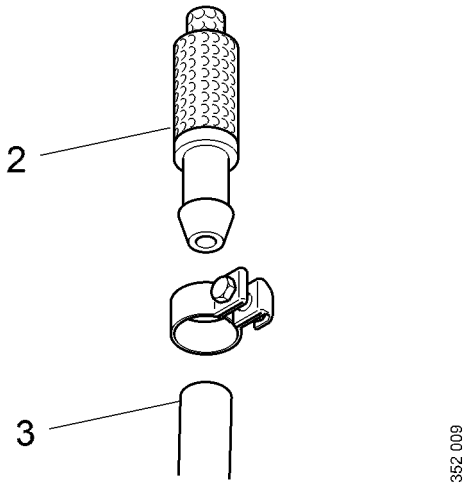

© Scania CV AB 2025, Sweden

Renewing the venting filter

The tank is supplied with a brass filter or with a plastic filter, depending on the variant selected. The plastic filter cannot be cleaned and needs to be renewed regularly.

1. Clean around the bleed hose connection on the tank.
2. Remove the hose and the old filter.
3. Clean the rubber hose.
4. Clean the surface where the filter is to be fitted.
   - Use water and detergent for coarse dirt.
   - Use a degreasing agent for grease and oil.
   - Use chemically clean petrol for adhesive residue.
5. Adjust the venting connection to the correct position.
6. Allow the detergent to evaporate.
7. Fit the filter on the hose.
8. Remove the protective tape from the fuel filter.
9. Fit the filter vertically and hold it for at least 5 seconds.
10. Refit the hose to the tank bleed connection.

Note:

Avoid folding, over stretching or chafing the hose. The ideal fitting temperature is 21°C - 38°C.

The ambient temperature of the filter must not exceed 90°C.

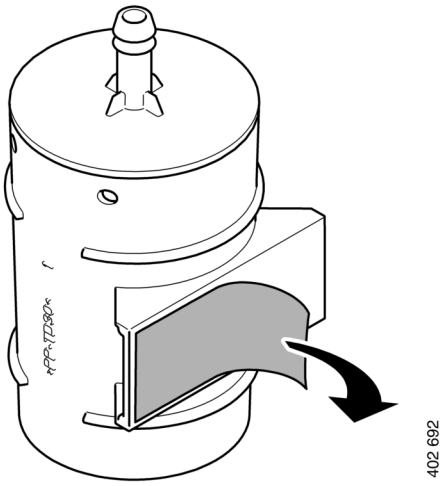

Protective tape on venting filter.

© Scania CV AB 2025, Sweden

Renewing the particulate filter

Tool

Number	Designation	Figure	Tool board
99 405	Clutch bleeder	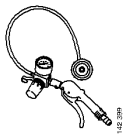	D6
99 654	VCI3		N/A
2 290 856	17 mm, Special socket, slotted, 1/2"	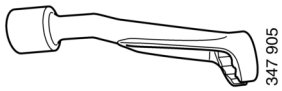	N/A

WARNING!

P3 type respiratory protective equipment/filter mask, eye protection and gloves should be worn for any work where there is a risk of exposure to dust from the particulate filter. A face mask, gloves and eye protection must be worn when cleaning the filter unit. Use protective equipment from the time the filter unit is exposed until the time cleaning is complete. Safety clearance for unprotected people is 3 m.

Do not eat, drink or smoke while work is in progress.

Any dust from the particulate filter should be removed using a vacuum cleaner with a HEPA filter that can filter out particles down to a particle size of 0.3 microns, in order to minimise exposure.

Wash your hands thoroughly after work on the particle filter.

IMPORTANT!

Be careful when handling the sensor body. It is sensitive and must not be bent or straightened. Renew the sensor if it is bent.

© Scania CV AB 2025, Sweden

1. Remove exhaust gas temperature sensor (1). Use 2 290 856 17 mm, Special sleeve, slotted, 1/2" if necessary.
2. Loosen the differential pressure sensor's harness-to-component connector (2).

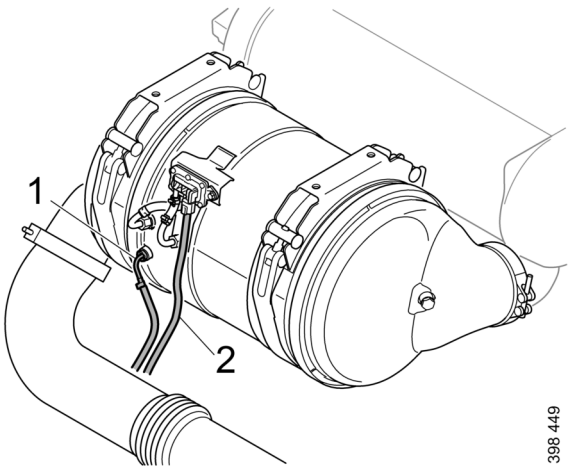

3. To facilitate fitting, use a marker pen to mark the position of the particulate filter. Make a mark on the oxidation catalytic converter in line with the particulate filter connections for the differential pressure sensor.

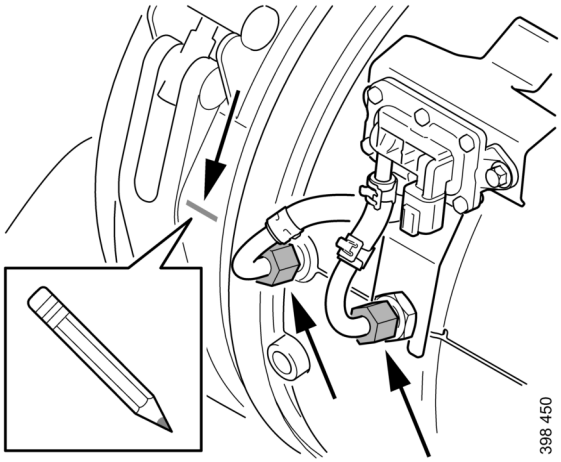

4. Remove the V-clamp at the particulate filter outlet (1) and the V-clamp holding the end plate (2). Remove the end plate (3).
5. Support the particulate filter with a jack or similar.

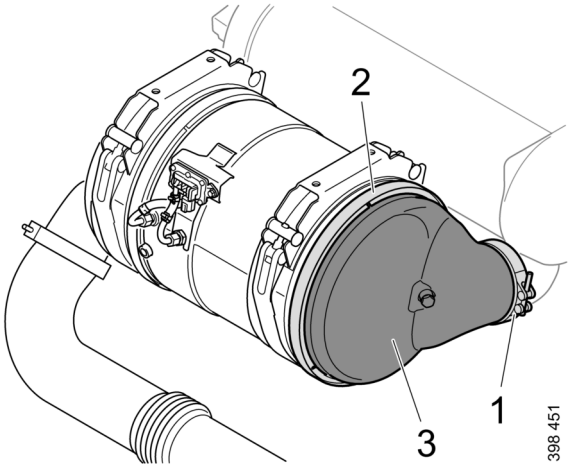

© Scania CV AB 2025, Sweden

6. Remove the V-clamp (2) and the band clamp around the particulate filter (1).

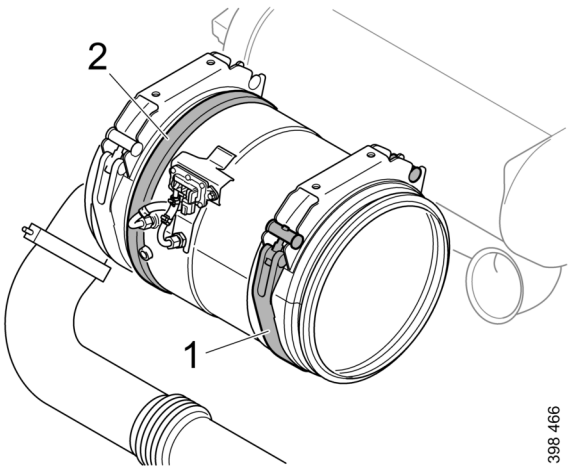

7. Lift off the particulate filter carefully.
8. Connect the engine to SDP3 using *99 654 VCI3*.

375 328

Follow the instructions in the wizard for entering a new ID number. In the wizard, data for soot and ash are also reset. See SDP3 > Checks and adjustments > Functions > Calibration > Powertrain > Emission control > Exhaust gas aftertreatment > New ID number upon renewal of the particulate filter or silencer.

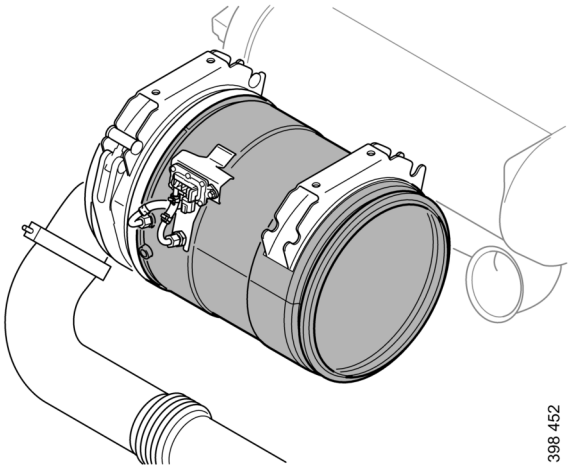

9. Detach the differential pressure sensor connections and remove the nut from the bracket.

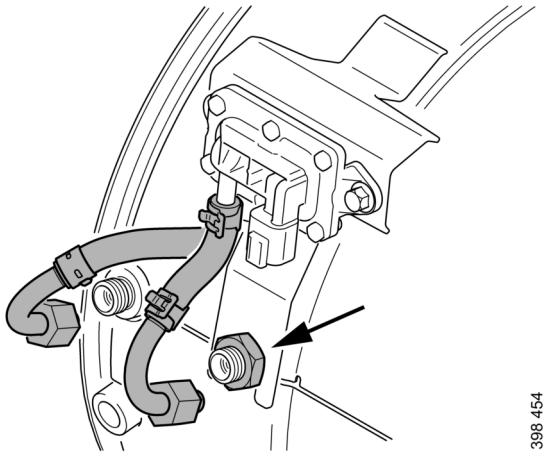

© Scania CV AB 2025, Sweden

10. Remove the differential pressure sensor and its bracket from the old particulate filter as described below:
    a) Tilt up the bracket and the differential pressure sensor (1).
    b) Pull off the bracket from the slot in the particulate filter (2).

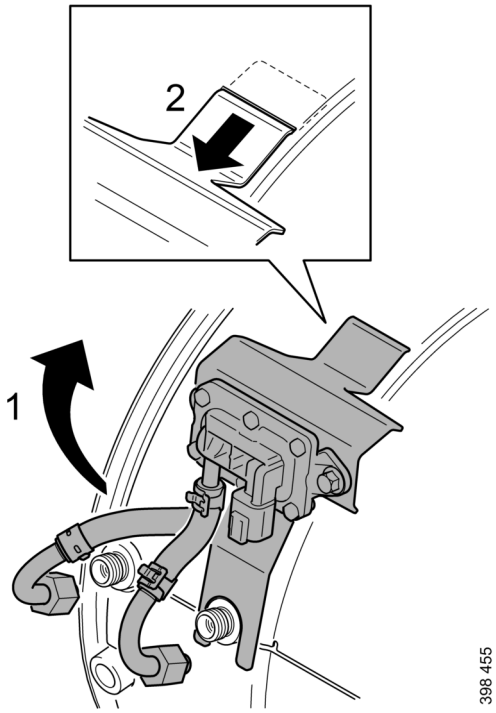

11. Remove one hose with accompanying pressure pipe from the differential pressure sensor and blow them clean using compressed air and 99 405 Clutch bleeder. Refit the hose and pressure pipe before removing the next one for cleaning with compressed air.

Note:

Make sure that the hoses are not mixed up when they are fitted on the differential pressure sensor.

12. Refit the differential pressure sensor and its bracket on the new particulate filter as described below:
    a) Push in the bracket into the slot (1).
    b) Tilt in the bracket and the differential pressure sensor against the particulate filter (2).

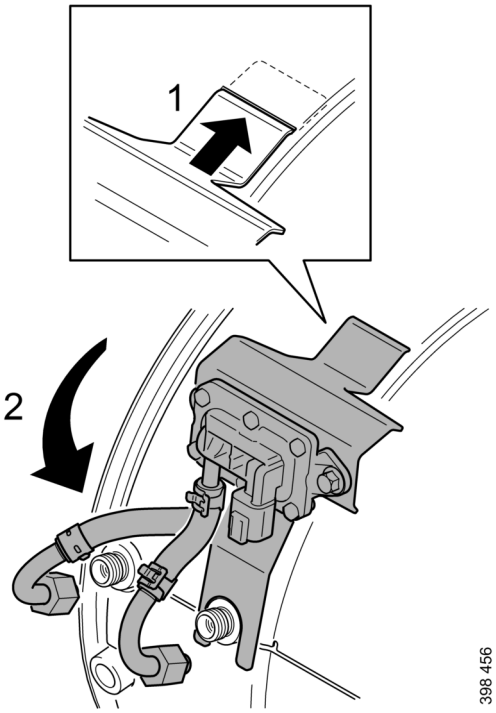

© Scania CV AB 2025, Sweden

13. Fit the bracket nut and differential pressure sensor connections. Tightening torque Nut, bracket for differential pressure sensor T141, 60 Nm.

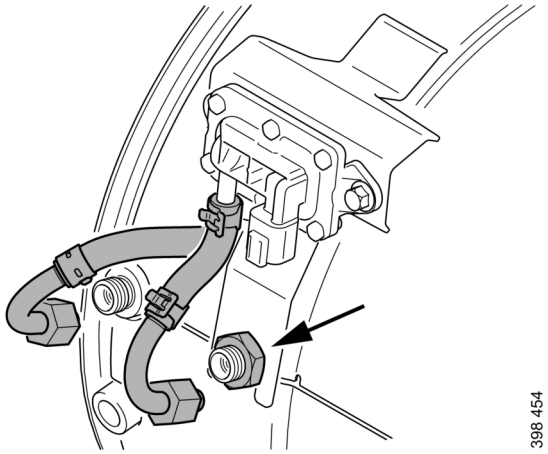

14. Clean the sealing surface of the oxidation catalytic converter (1). The surface should be free of gasket residue.
15. Fit new gaskets (2) to the sealing surfaces on the particulate filter (3) and the oxidation catalytic converter (1).
16. Fit the new particulate filter. Use a jack or similar to support the particulate filter.

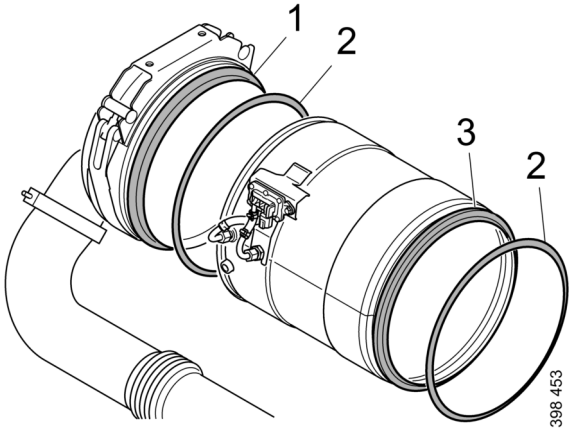

17. Fit the V-clamp (2) and the band clamp (1) loosely around the particulate filter.

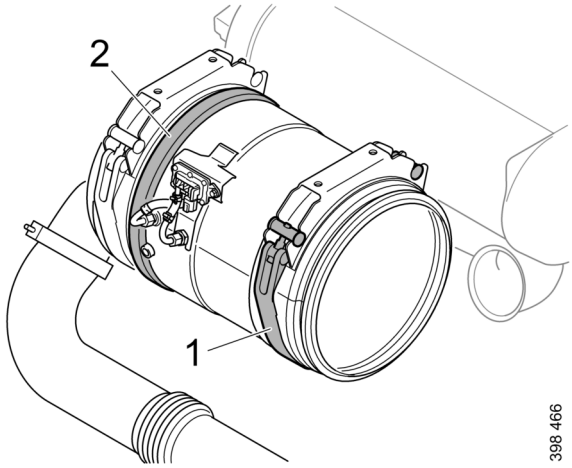

© Scania CV AB 2025, Sweden

18. Align the particulate filter outlet for the differential pressure sensor with the mark. Tighten the V-clamp and the band clamp around the particulate filter. Tightening torque, V-clamp, 20 Nm.

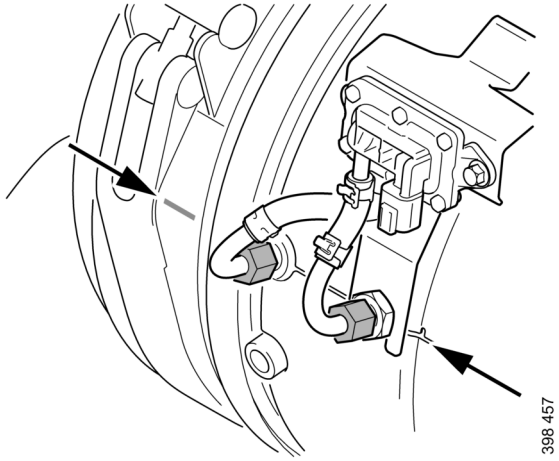

19. Clean the sealing surface on the end plate (3). The surface should be free of gasket residue.
20. Fit the end plate and V-clamp (2) which hold the end plate in place. Tightening torque, V-clamp, 20 Nm.
21. Fit the V-clamp at the particulate filter outlet (1). Tightening torque, V-clamp, 20 Nm.

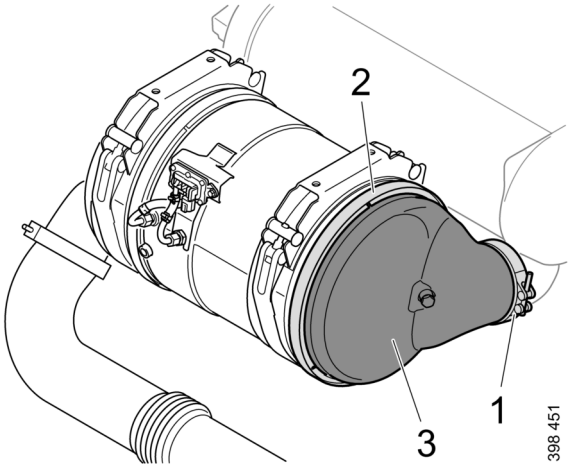

22. Fit the exhaust gas temperature sensor (1). Use 2 290 856 17 mm, Special sleeve, slotted, 1/2" if necessary. Tightening torque, Exhaust gas temperature sensor, T4010, 30 Nm.
23. Connect the differential pressure sensor harness-to-component connector (2).

IMPORTANT!

Be careful when handling the sensor body. It is sensitive and must not be bent or straightened. Renew the sensor if it is bent.

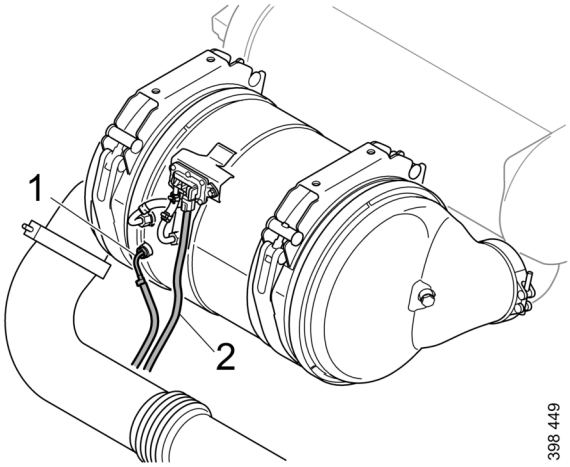

© Scania CV AB 2025, Sweden

Quality requirements for fuel

Quality requirements and testing standards for the most important properties of different types of fuel are described in the Workshop Manual. This can be ordered from Scania dealers or directly from Scania.

Diesel

Characteristics

The quality of the diesel is very important for the operation and service life of the engine and the fuel system, and also for the engine performance.

REQUIREMENT!

The diesel should comply with the requirements of European standards EN590 or EN15940.

However, Scania accepts larger tolerances of certain properties. Please see the table below.

Characteristic	Requirements
Viscosity at 40°C (104°F)	1.4-4.5 cSt
Density at 15°C (59°F)	0.77-0.87 kg/dm^3
Ignitability (CET rating)	minimum 49
Lowest flashpoint	56°C (132°F)
Particulate contamination level	Classification 22/20/17 according to ISO 4406

Sulphur content

IMPORTANT!

The operator is responsible for using the correct type of diesel to ensure that local laws are complied with.

Important to use low sulphur diesel

It is important for sulphur-free or ultra-low sulphur diesel to be used in engines with SCR systems certified in accordance with EU Stage III B/US Tier 4i or later to ensure that the engine operates correctly. If diesel with an excessive sulphur content is used, it can cause damage to the engine and the SCR system.

From January 2011 legislation in the USA and Europe requires all diesel engines not used on the road to be run on sulphur-free or ultra-low sulphur diesel.

REQUIREMENT!

In Europe, diesel must be sulphur-free in accordance with the standard EN 590. This means that the sulphur content must not exceed 10 ppm.

In the USA, the diesel must be ultra-low sulphur in accordance with the ASTM D975 standard. This means that the sulphur content must not exceed 15 ppm.

© Scania CV AB 2025, Sweden

Permitted sulphur content in diesel

Engine type	Max. sulphur content	Note
Engines without EGR and SCR systems	4,000 ppm (0.4%)	If the sulphur content is higher than 2,000 ppm, the oil change intervals must be halved. A higher sulphur content than 4,000 ppm is not permitted, since this will result in engine damage.
Engines with SCR system only	500 ppm (0.05%)	A higher sulphur content than 10 ppm for Europe or 15 ppm for the USA may only be used where EU Stage III A/US Tier 3 or less restrictive emission legislation applies.
Engines with both EGR and SCR systems	350 ppm (0.035%)	A higher sulphur content than 10 ppm for Europe or 15 ppm for the USA may only be used where EU Stage III A/US Tier 3 or less restrictive emission legislation applies.
Engines with DPF system	15 ppm (0.0015%)	If higher sulphur content is used, problems with exhaust gas aftertreatment may arise. This can in turn lead to a shortened service life of the engine and DPF system.

Diesel with a higher sulphur content than 500 ppm for engines with an SCR system

If diesel with a higher sulphur content than permitted is used on a short-term basis, this will not cause permanent damage to the SCR catalytic converter. The SCR catalytic converter may, however, require diesel with a low sulphur content for some time after this to regain its normal efficiency.

If diesel with too high a sulphur content is used for a prolonged period, there is a risk that the SCR catalytic converter will not operate correctly, which will result in a reduction in engine torque.

© Scania CV AB 2025, Sweden

Temperature dependence of diesel

IMPORTANT!

Mixing kerosene or other paraffins with the diesel is prohibited. The injectors may be damaged.

It is not permissible to mix petrol with diesel. In the long term petrol can cause wear in the injectors and engine.

At temperatures lower than those specified for the diesel, paraffin wax may precipitate from the diesel and block filters and pipes. The engine can then lose power or stop.

The diesel is adapted for use in the specific climate of each country. If an engine is to be operated in a temperature zone with a temperature lower than normal, first identify the temperature properties of that particular diesel.

© Scania CV AB 2025, Sweden

Biodiesel (FAME)

Use of biodiesel

IMPORTANT!

For engines with SCR systems, a maximum of 10% mixture of biodiesel should be used.

Scania uses the term biodiesel to refer to a renewable diesel made from greases or oils and methanol. The biodiesel should conform to the requirements of European standard EN 14214 or Brazilian standard ANP-45. For biodiesel in accordance with EN 14214 or ANP-45, the generic term FAME is frequently used.

Normal diesel in accordance with EN 590 can contain up to 7% biodiesel from the diesel supplier. There are grades of diesel that comply with EN 590 but contain a higher mixture of biodiesel.

Scania approves up to a 10% mixture of biodiesel for all engines.

Storage of biodiesel

IMPORTANT!

Biodiesel must not be stored for more than 6 months.

Biodiesel has a maximum storage life of 6 months from the date of production to the expiry date. Biodiesel is affected by light, temperature, water, etc. during storage, which affects the characteristics and durability of the biodiesel.

Biodiesel also has lower stability against oxidation than diesel. This can result in a thickening of the biodiesel and blocking of parts of the fuel system, e.g. the fuel filter. Bacterial growth can occur when biodiesel is stored in a tank in unfavourable conditions. Avoid storage in barrels or auxiliary tanks, except when fuel turnover rates are high. Check tank cleanliness whenever refuelling takes place.

If the engine has been refuelled with biodiesel, and is stationary for a long period, condensation water can form in the fuel tank resulting in bacterial growth.

See also the section Preservative fuel.

Renewable diesel (HVO)

HVO is a synthetic diesel which is manufactured through the hydrogenation of plants and animal fats. To the user, HVO is reminiscent of diesel in accordance with EN590, apart from HVO having a somewhat lower density.

Scania approves the use of up to 100% HVO for all engines in accordance with the European standard EN 15940.

Gas-to-liquids (GTL)

GTL is a synthetic fuel that is often refined from natural gas. To the user, GTL is reminiscent of diesel in accordance with EN590, apart from GTL having a somewhat lower density and less odour.

Scania approves the use of up to 100% GTL in accordance with the European standard EN 15940.

© Scania CV AB 2025, Sweden

Reductant for SCR

IMPORTANT!

The operator is responsible for using the correct type of reductant to ensure that local laws are complied with.

REQUIREMENT!

In order for the emission control to meet the emission requirements set by the public authorities, the reductant should be specified in accordance with ISO 22241.

Reductant is a solution consisting of urea and water, and is usually called AdBlue®, DEF, ARLA 32 eller AUS 32depending on the market. If the engine is fitted with an SCR system, the reductant is added to the exhaust gases upstream of the catalytic converter. This reduces nitrogen oxide emissions.

Reductant in accordance with ISO 22241 contains 32.5% by weight of urea and freezes at approximately -11°C (12°F). When the solution freezes, ice and urea always maintain the same concentration. Always store reductant at a temperature between -11°C and 30°C (12-86°F).

Rec. % by weight of urea	Limit values according to ISO 22241
32.5%	31.8-33.2%

Reductant is normally colourless if no dye has been added. It is not harmful to the skin. Nor is it toxic in small quantities, but it tastes very unpleasant.

Reductant is highly corrosive. Therefore, rinse any reductant spillage from connections and other details using lukewarm water. Water works very well for cleaning purposes. Please use hot water. If reductant seeps into electrical connections or electrical cables, these must be renewed.

Reductant has a low surface tension and rapidly spreads over large areas, which then become very slippery.

Reductant can dry out and form white or greyish brown crystals or deposits that can be washed away with warm water.

The risk of crystal formation increases with low outdoor temperatures. When the outdoor temperature is below -20°C (-4°F), reductant dosing is switched off to avoid the risk of crystals forming in the SCR system.

© Scania CV AB 2025, Sweden

Preparing the engine for storage

Note:

The engine should be stored indoors, in a temperature-controlled room with constant (or near constant) temperature, protected from dirt and dust.

If the engine is not being used for an extended period its cooling system, fuel system and combustion chamber and outside must be protected against rust.

On delivery, the engine is protected by so-called VCI plastic. Provided that the VCI bag is intact and has not been removed, the engine can be stored for 3 years without any action required. After 3 years, the engine must be preserved again and the battery must be renewed.

The interval between each new Preparing for storage is then 24 months and the bag is renewed.

The VCI bag must be inspected at least once a year. If the plastic is missing or broken, it must be replaced with a new one immediately.

An alternative to preparing the engine for long-term storage is to start the engine and warm it up every 6 months.

Preparation means that the following measures are taken:

- The engine is cleaned thoroughly.
- Run the engine for a specific period using special preservative fuel, oil and coolant.
- Otherwise prepare the engine for storage (filter renewal, lubrication, etc.).

Preservative products

Preservative oil

Use a normal engine oil that meets the requirements in this section.

Preservative coolant

Use coolant containing 50% by volume of glycol. Example: BASF MPG Glysacorr P113 and Valvoline Zerex P113 FP.

WARNING!

Ethylene glycol can be fatal if ingested and can cause skin irritation and eye damage.

© Scania CV AB 2025, Sweden

Preservative fuel

Preservative fuel must not contain biodiesel. Even small amounts of 5-10% biodiesel can have adverse effects on the engine when in long-term storage.

Long-term storage of diesel, where the diesel comes into contact with water, may lead to the growth of micro organisms (bacteria and fungus).

In order to minimise the growth of micro-organisms, preservative fuel should contain the following additives. The additives should be selected and added by the fuel supplier.

Preservative fuel should comply with the following requirements:

- 0% biodiesel.
- Max. sulphur content 50 ppm.
- Max. water content 200 ppm.
- The fuel must contain additives to stop the growth of micro-organisms.

Reductant

Over time, the water in the reductant evaporates and there is only urea left. The reductant then begins to crystallise. The reductant tank is not sensitive to crystals, but the ball valves in the reductant pump may become clogged. However, note that corrosion or other particles can also clog the ball valves.

All connections in the SCR system must be sealed before storage, so that the water in the reductant does not evaporate. The SCR system should then be stored in a cool location and not in direct sunlight. If the reductant tank has never been filled with reductant, it can be stored when empty for an unlimited time.

When the engine is taken into operation again, all reductant must be drained and changed. If old reductant is used, the SCR system will not work.

© Scania CV AB 2025, Sweden

Preparations for storage

Environment

Use a suitable container. Used oil, coolant and reductant must be disposed of as specified in national and international laws and regulations.

Note:

Do not remove the injectors.

1. Remove plugs and tape from the coolant connections, air intake and exhaust pipe.
2. Drain the oil.
3. Renew the oil filter and fuel filter.
4. Clean the centrifugal oil cleaner.
5. Fill with engine oil to the minimum level on the oil dipstick.
6. Drain and flush the cooling system of any old coolant.
7. Top up with preservative coolant.
8. Mix preservative fuel in a can. Detach the fuel pipe at the feed pump suction pipe and connect a hose from the can.
9. Detach the fuel pipe at the overflow valve and connect a return hose to a separate can.
10. Connect and bleed the fuel system.
11. Start the engine and run it at about 1,100 rpm for 20 minutes.

    If the engine has an SCR system and the reductant tank is empty, it is possible to run the engine for this limited time without damaging the components of the SCR system. This applies if the engine is run without load.
12. If the engine has an SCR system and the reductant tank is full of reductant: Seal all connections in the SCR system.
13. Remove the rocker covers and lubricate the valve mechanisms with pushrods and the valve tappets, as well as the injector mechanism, using a liberal amount of preservative oil. Refit the rocker covers.
14. Drain the coolant if the engine is not to be stored with coolant in the system. Plug and tape all coolant connections if the engine is to be stored without coolant in the cooling system.
15. Renew the filter element in the air cleaner.
16. Cover the air intake and exhaust pipe.
17. Spray the alternator and starter motor with water-repellent anti-corrosive oil: CRC 226, LPS1 or the equivalent.
18. Spray the outside of smooth engine parts, first with penetrating preservative oil such as Dinitrol 25B and then with Dinitrol 112 or equivalent.
19. Clearly mark the engine with the storage preparation date, and state that the engine must not be started or cranked.

Batteries

WARNING!

Wear protective gloves and eye protection when charging and handling batteries. The batteries contain a highly corrosive acid.

Remove the batteries and trickle charge them at the battery charging station. This does not apply to batteries specified as maintenance-free by the manufacturer.

The same applies to short-term storage, even if the engine has not been prepared for storage as above.

Storage

After the preparation, the engine should be stored indoors in a dry location at room temperature. The engine must be packed in packaging made of VCI plastic to protect against dust, dirt and moisture.

© Scania CV AB 2025, Sweden

When the engine is to be taken into operation again

1. If the engine is fitted with an SCR system: Drain and clean the reductant tank and fill with new reductant.
2. Remove plugs and tape from the coolant connections, air intake and exhaust pipe.
3. Fill the cooling system with coolant.
4. Drain the preservative oil.
5. Renew the oil filter and fuel filter.
6. Fill with new engine oil.
7. Remove the rocker covers and lubricate the valve mechanisms with pushrods and the valve tappets, as well as the injector mechanism, using a liberal amount of oil. Refit the rocker covers.
8. Drain the preservative fuel from the fuel manifold.
9. Connect and bleed the fuel system.
10. Wash off any preservative oil on the outside using white spirit.

© Scania CV AB 2025, Sweden

Technical data

General data

Number of cylinders and configuration	5, straight
Working principle	4-stroke engine
Cylinder diameter (mm/in)	130/5.12
Piston stroke (mm/in)	140/5.51
Displacement (dm^3/in^3)	9.3/567.5
Firing order	1 - 2 - 4 - 5 - 3
Compression ratio	
DC09 310/311/312/313/320/327/330/331/332/333A	19:1
DC09 076/078/080A	18:1
DC09 084/384/085/385/086/386/387/089/389A	17:1
Other engine types	16:1
Engine direction of rotation viewed from rear	Anticlockwise
Fan direction of rotation viewed from front	Clockwise
Cooling	Coolant
Valve clearances, cold engine	
Intake valve (mm/in)	0.45/0.018
Outlet valve (mm/in)	0.70/0.028
Number of teeth on the flywheel	158
Low idling (rpm)	500-975
Maximum full-load speed (rpm)	1,800/2,100
Fuel	Diesel
Approximate weight, without coolant and oil (kg/lb)	
DC09 084/384/085/385/086/386/387/089/389A	975/2,150
Other engine types	950/2,094

Lubrication system

Oil volume	See Maintenance
Oil cleaning	Centrifugal oil cleaning
Oil cooler	Coolant cooled, full flow
Oil filter	Paper filter from Scania
Interval between oil changes (h)	500
Oil pressure (bar/psi)	
Normal with the engine at operating temperature, operating speed	3-6/43.5-87
Minimum permitted at idling speed	0.7/10.2
Crankcase pressure with closed crankcase ventilation (mbar/psi)	-5.4 to 2.0/-0.08 to 0.03

© Scania CV AB 2025, Sweden

Intake system

Permissible pressure drop in the intake system with cleaned or new filter (mbar/psi)	30/0.44
Permissible pressure drop in the intake system with blocked (dirty) filter (mbar/psi)	65/0.94

Cooling system

Coolant	See chapter Coolant
Coolant volume, excluding radiator (dm^3/US gallons)	
DC09 084/085/086/089/384/385/386/387/389A	16/4.2
Other engine types	15/4.0
Coolant volume including 1.1 m^2 radiator (dm^3/US gallons)	
DC09 084/085/086/089/384/385/386/387/389A	38/10.0
Other engine types	37/9.8
Coolant temperature (°C/°F)	90-95/194-203
Number of thermostats	1
Thermostat opening temperature (°C/°F)	80/176 and 87/189

Fuel system

Injection system	XPI (Extra High Pressure Injection)
Engine management system	EMS
Fuel filter	Paper filter from Scania
Water separating prefilter	Paper filter from Scania
Filter for tank venting	Paper filter from Scania

Electrical system

Type	1-pin, 24 V, DC
Starter motor, standard equipment	1-pin, 24 V, 6 kW
Alternator, standard equipment	1-pin, 28 V, 100 A

© Scania CV AB 2025, Sweden

Tightening torque for screw joint

Screws and nuts

Hexagon screws, hexagon socket screws, Torx screws, hexagon nuts

Metric thread. Strength class 8.8/8.

Thread	Tightening torque	
	Nm	Lb-ft
M4	2.9	21
M5	6	4
M6	9.5	7
M8	24	18
M10	47	35
M12	84	62
M14	135	100
M16	210	155
M18	290	214
M20	420	310
M22	580	428
M24	730	538

Flange screws with hexagonal head and hexagonal flange nuts

Metric thread. Strength class 8.8/8.

Thread	Tightening torque	
	Nm	Lb-ft
M5	6.7	5
M6	10.2	8
M8	26	19
M10	50	37
M12	92	38
M14	149	110
M16	184	136

© Scania CV AB 2025, Sweden

Hose clamps

Specifications in the tables show tightening torque when tightening by hand.

Note:

The maximum tightening torque for a new unfitted hose clamp is 1 Nm (0.7 lb-ft).

A = width (mm)	Tightening torque	
	Nm	Lb-ft
7.5-9	1.5	1
12	5	4
20	10	7
25	20	15

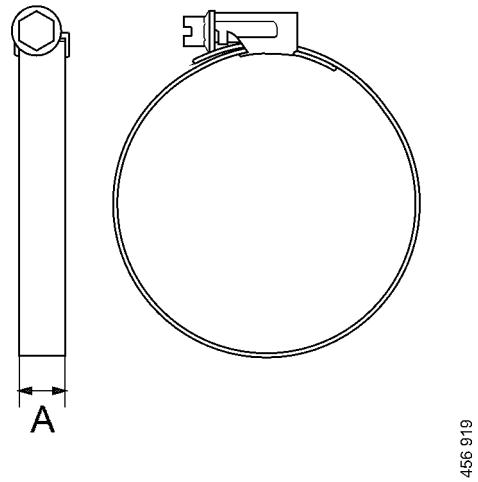

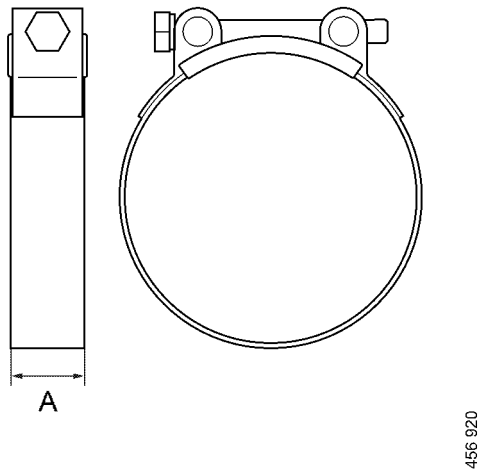

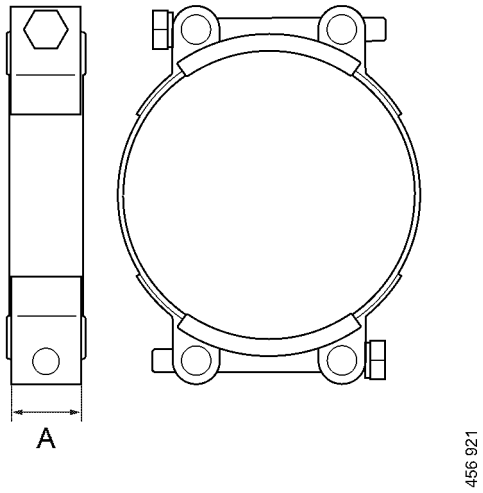

© Scania CV AB 2025, Sweden

Scania Assistance

Wherever you are, you can always get assistance from Scania's service organisation, Scania Assistance, 24 hours a day, every day of the year.

Always call the contact for your country.

Country	Tel.
Austria	+43 1 256 44 11
America	+1 (0) 800 272 2642
America	1 800 272 2642
Argentina	800,999,722,642
Australia	+611300722642
Belgium	+32 2 264 00 00
Botswana	+267 72 102 591
Brazil	+8000194224
Bulgaria	+359 88 666 0001
Chile	188,800,722,642
Colombia	+1800184548
Czech Republic	+420,225,020,225
Denmark	+45 333 270 44
Estonia	Tallinn: +372 5153 388
Estonia	Tartu: +372 5126 333
Estonia	Pämu: +372 5071 477
Estonia	Rakvere: +372 5074 655
Finland	+358 10 555 24
France	+33 2 414 132 32
Germany	+49 261 887 8888
Great Britain	0 800 800 660
Great Britain	+441274301260
Hungary	+36,209,727,197
Ireland	+353 71 963 4000
Italy	+39046 1996222
Latvia	+46 8 52 24 24 24

Country	Tel.
Latvia	+371 29 44 24 24
Lithuania	+46 8 52 24 24 24
Luxembourg	+32 2 264 00 00
Malaysia	1800 08 8500
Malaysia	+6035590907
Mexico	+543327451092
Morocco	+3222640000
Namibia	+264634461352
Netherlands	+31 76 52 54 111
Norway	+47 223 217 00
Peru	0800-51-727
Peru	(01)512-1877
Poland	+48 22 331 22 33
Portugal	+34 91 678 9247
Romania	+40 723 27 27 26
Russia	+7(495) 925 77 75
Singapore	+6565917180
Slovakia	+421,903,722,048
South Africa	0 800 005 798
South Africa	+27 11 226 5005
Spain	+34 91 678 80 58
Sweden	+46 42 100 100
Switzerland	+41 800 55 24 00
Thailand	+66819397525
Thailand	+1800 019 88
Uruguay	0 800 835 1

Other countries: +46 8 52 24 24 24

Note:

Calls will be recorded for training purposes.

© Scania CV AB 2025, Sweden